prisma20C
prisma20A
prismaCR
prisma25S
prisma25S-C
prisma25ST
prismaLAB
prismaAQUA

Sleep therapy devices

Instructions for use for devices of type WM 100 TD and type WM 100 TH

WEINMANN
medical technology

Table of contents

1 Introduction 5

1.1 Intended use ... 5
1.2 Function ... 6
1.3 User qualifications ... 7
1.4 Indications ... 7
1.5 Contraindications ... 9
1.6 Side effects ... 10

2 Safety 11

2.1 Safety information ... 11
2.2 General information ... 14
2.3 Warnings in this document ... 15

3 Product description 16

3.1 Therapy device overview ... 16
3.2 Display ... 17
3.3 Components ... 23
3.4 Accessories ... 24
3.5 Labels and symbols ... 25

4 Preparation 30

4.1 Setting up the therapy device ... 30
4.2 Connecting components ... 30
4.3 Connecting optional accessories ... 34

5 Operation 43

5.1 Navigating the menu ... 43
5.2 Switching on the therapy device ... 43
5.3 Switching off the therapy device ... 46
5.4 Starting the therapy ... 46
5.5 Ending the therapy ... 48
5.6 Performing a mask test ... 49
5.7 Switching softSTART on/off ... 50
5.8 Setting the respiratory air humidifier ... 51

WM 67841 a 08/2014

5.9 Setting the alarm 54
5.10 Viewing therapy data and device information 56
5.11 Using the SD card 58

6 Settings in the menu 62
6.1 Setting comfort parameters 62
6.2 Setting accessories parameters 63
6.3 Setting time parameters 64
6.4 Setting device parameters 64

7 Hygienic preparation 66
7.1 General information 66
7.2 Cleaning intervals 66
7.3 Hygienic preparation of the therapy device 67
7.4 Hygienic preparation of the respiration hose 69
7.5 Hygienic preparation of the respiratory air humidifier 70

8 Function check 76
8.1 Intervals 76
8.2 Checking the therapy device 76
8.3 Checking the respiratory air humidifier 77

9 Alarms and error messages 78
9.1 Alarms 78
9.2 Faults in the therapy device 79
9.3 Faults in the respiratory air humidifier 79
9.4 Display messages 80

10 Maintenance 81

11 Storage and disposal 82
11.1 Storage 82
11.2 Disposal 82

12 Appendix 83
12.1 Technical data 83
12.2 Pressure volume curve 88
12.3 Pneumatic system diagram 89
12.4 Separation distances 89

WM 67841a 08/2014

12.5 Scope of supply 90
12.6 Warranty 93
12.7 Declaration of conformity 94

1 Introduction

1.1 Intended use

1.1.1 WM 100 TD therapy devices

The WM 100 TD devices are pressure-controlled, non-invasive, non-life-sustaining therapy devices for the treatment of sleep-related respiratory disorders (SRRDs) by means of a mask.

The devices can be used on persons weighing above 30 kg. The CPAP mode can be used on persons above the age of 3 years. The device may only be used on the instruction of a physician.

The WM 100 TD devices are used in clinical facilities and in domestic situations. In domestic situations, the devices are also taken on trips.

1.1.2 WM 100 TH respiratory air humidifiers

The integrable respiratory air humidifiers WM 100 TH are used to enrich the air flow created by the therapy device WM 100 TD with moisture. The respiratory air humidifier WM 100 TH warms and humidifies the respiratory air and thus prevents drying out of the mucosae in the respiratory tract.

The WM 100 TH prismaAQUA respiratory air humidifier described in these instructions for use can be used with WM 100 TD therapy devices.

The WM 100 TH devices are used in clinical facilities and in domestic situations. In domestic situations, the devices are also taken on trips.

WM 67841a 08/2014

1.2 Function

1.2.1 WM 100 TD therapy devices

The fan in the therapy device sucks ambient air in through a filter, compresses it, and routes it to the device outlet.

From here, the air flows through the hose system and the mask to the patient. The exhalation system in front of the mask or optionally integrated in the mask prevents CO_2-enriched exhaled air from collecting in the hose system.
The therapy device determines and analyzes the pressure and breathing flow signal. This allows respiratory events to be recognized.

It can function with one pressure level (CPAP) or with two or three pressure levels (bi-level or inspiratory pressure, expiratory pressure, and end-expiratory pressure). Depending on the version employed, the device can set the pressure levels automatically within preset limits, or manually too. Depending on the mode, the pressure can be continually applied at one level, triggered by the patient or applied with time controls. Pressure signals, breathing flow signals, and respiratory events can be saved and/or emitted as an analog output on a PSG system.

The therapy data are saved in the device and on an SD card for the therapy control.

The device is operated via an On/Off button and a touchscreen.

The device can be remotely controlled using the prismaTS therapy software.

In the case of a power failure, the settings are retained and the therapy is continued once the power supply is restored.

WM 67841 a 08/2014

1.2.2 WM 100 TH respiratory air humidifiers

The heatable respiratory air humidifier functions in accordance with the so-called pass-over principle. The air coming from the therapy device is routed across the surface of a preheated water reservoir. This increases the relative humidity and the temperature of the air flow.
The humidifier level can be set individually using the buttons on the therapy device.

The power of the element and consequently the temperature of the water in the humidifier chamber is controlled electronically via the therapy device.
The transparent window of the humidifier chamber makes it possible to check the water level at any time.

1.3 User qualifications

The person operating the device is referred to in these instructions for use as the "user". In contrast, a "patient" is the person receiving the therapy. Always perform all the operating steps in accordance with these instructions for use.

1.4 Indications

prisma20C

CPAP therapy device for the treatment of patients with obstructive sleep apnea with a constant pressure requirement.

prisma20A

APAP therapy device for the treatment of patients with obstructive sleep apnea with a variable pressure requirement. The therapy pressure adjusts automatically to suit the patient's pressure requirement through the night.

WM 67841a 08/2014

prismaCR

Therapy device for the treatment of patients with periodic breathing or Cheyne-Stokes respiration (e.g., in cases of heart failure) as well as with central, mixed, or complex sleep apnea. The therapy device adjusts the ventilation automatically and continually to the changing requirements of the patient.

prisma 25S, prisma 25S-C, prisma25ST

BiLevel therapy devices for the treatment of patients with obstructive, mixed, or complex sleep apnea and

- a high pressure requirement;
- poor compliance with CPAP due to the high expiratory pressure;
- a fluctuating pressure requirement;
- central apneas;
- nocturnal hypoventilation (e.g., OHS);
- respiratory insufficiency or
- for example coprevalent COPD (overlap).

prismaAQUA

Indications for the use of the respiratory air humidifier in combination with the therapy device are dry upper airways and if the respiratory air is felt to be too cold. prismaAQUA may only be used in accordance with the recommendations of a physician.

WM 67841a 08/2014

1.5 Contraindications

The physician in charge is responsible for deciding whether to use the therapy device in each individual case.

- Acute cardiac decompensation
- Severe arrhythmia
- Severe hypotension, particularly in combination with intravascular volume depletion
- Severe epistaxis
- High risk of a barotrauma
- Severe chronic/decompensated pulmonary conditions
- Pneumothorax or pneumomediastinum
- Pneumocephalus
- Cranial trauma
- Status following brain surgery or surgical intervention on the pituitary gland or the middle/inner ear
- Acute sinus infection (sinusitis), middle ear infection (otitis media) or perforated eardrum
- Dehydration
- Do not use the respiratory air humidifier on patients who have undergone an airway bypass procedure.

WM 67841a 08/2014

1.6 Side effects

The following undesirable side effects may occur when using the therapy device for short or long periods of time:

- Pressure marks from the respiratory mask and the forehead cushion on the face
- Flush of the facial skin
- Nasal congestion
- Dry nose
- Morning xerostomia (dry mouth)
- Sensation of pressure in the sinuses
- Irritated conjunctiva
- Gastrointestinal air insufflation ("bloating")
- Epistaxis

These side effects are general side effects associated with therapy using a sleep therapy device and are not specially linked to the use of WM 100 TD devices.

No side effects are known for the use of the respiratory air humidifier.

WM 67841a 08/2014

2 Safety

Please read these instructions carefully. They form part of the devices described, and must be available at all times.

Use the unit for the designated purpose only (see "Intended use").

For your own safety and that of your patients, and in accordance with the requirements of Directive 93/42/EEC, please observe the following safety instructions.

2.1 Safety information

2.1.1 Safe use of the therapy device, components, and accessories

Warning

Risk of injury due to device or component malfunction!
A damaged device or damaged components may result in injury to the patient, user or bystanders.
⇒ Only operate the device and components if they are externally undamaged.
⇒ Only operate the device and components if the function check has been successfully completed.
⇒ Only operate the device if the display is functional.

Risk of injury if the device is operated outside the prescribed ambient conditions!
Use of the device outside the prescribed ambient conditions can result in failure to comply with tolerances, device failures, and injury to the patient.
⇒ Only operate the device within the prescribed ambient conditions (see chapter "Technical data").

Risk of injury if disposable items are reused!
Disposable items are only intended to be used once. Reused disposable items may be contaminated and/or not function correctly and thus cause patient injury.
⇒ Do not reuse disposable items.

WM 67841a 08/2014

Risk of infection when reusing therapy device!
When the therapy device is used by multiple patients, infections may be passed on to the next patient.
⇒ Use a bacteria filter. When the device is used without a bacteria filter: Have the device hygienically prepared by the manufacturer, Weinmann, or an authorized dealer.

Treatment prevented due to increased resistance when bacteria filters are used!
Misting or moistening can increase the resistance of the bacteria filters, thereby modifying the output of the therapy pressure.
⇒ Check bacteria filters for increased resistance and blockages regularly and remove them.

2.1.2 Power supply

Caution **Risk of injury due to inaccessible power plug!**
An obstructed power plug cannot be pulled out in an emergency and can thus result in injury.
⇒ Keep the power plug and power supply accessible at all times.

Risk of injury and material damage as a result of insufficient power supply!
Operation of the device outside the specified power supply range can injure the user and damage the device.
⇒ Only operate the device with the supplied power supply unit at voltages from 100 V to 240 V.
⇒ Use the DC adapter for operation at voltages from 12 V or 24 V.

2.1.3 Transport

Notice **Water in the device can cause material damages!**
If the device is tilted severely, the residual water from the respiratory air humidifier can enter the device and damage it.
⇒ Do not transport or tilt the device when the respiratory air humidifier is filled.

Dirt in the device can cause material damage!
Dirt entering the device during transport can damage the device.
⇒ Only transport the device with the cover in position.
⇒ Transport the device in the corresponding transport bag.

WM 67841 a 08/2014

2.1.4 Therapy

Warning **The use of oxygen in combination with flammable substances poses a fire hazard!**

Oxygen in combination with flammable substances can result in spontaneous explosions. In cases of insufficient ventilation, oxygen in the surrounding area (e.g., clothes, hair, bedclothes) can become enriched and cause fires and thus injuries to the patient, user, and others in the immediate vicinity.

⇒ Do not smoke.
⇒ Do not use naked flames.
⇒ Ensure sufficient ventilation.
⇒ Use an oxygen safety valve.
⇒ Keep the device and screwed unions free from oil and grease.
⇒ Always replace splashguards immediately after use.

Risk of injury from burning oxygen!

Supplying oxygen without special safety equipment can cause fires and injure people.

⇒ Always use an oxygen safety valve.
⇒ Observe the instructions for use for the oxygen safety valve and the oxygen supply unit.
⇒ Set up oxygen sources more than 1 m from the device.

Caution **Prevented therapy and material damage due to dirt in the device or respiratory air humidifier!**

Dirt entering the device can impair the success of the therapy and damage the device.

⇒ Use the gray air filter.
⇒ If necessary, use the white pollen filter (optional accessory).

Risk of injury if the patient connection opening becomes hot when uses a hose heating system!

In combination with the device, the hose heating system generates higher temperatures at the patient connection opening.

⇒ Observe the instructions for use for the hose heating system.

2.2 General information

- Use of third-party products may lead to functional failures and restricted fitness of purpose. Biocompatibility may also be compromised. Please note that in these cases, any claim under warranty and liability will be void if neither the accessories nor original replacement parts recommended in the instructions are used.
- Repairs, servicing, and maintenance should only be carried out by the manufacturer or by a technician expressly authorized by the manufacturer.
- Only connect up the devices and modules permitted in accordance with these instructions for use. The devices must satisfy their respective product standard. Position non-medical devices outside of the patient's immediate vicinity.
- The operator is responsible for ensuring the compatibility of the therapy device and all the connected components and accessories prior to the application with the patient.
  Only have modifications to the unit carried out by the manufacturer, Weinmann, or by a technician expressly authorized by Weinmann.
- Please observe the section on hygienic preparation in order to avoid infection or bacterial contamination (see chapter "Hygienic preparation").
- Also observe the respective instructions for use for the therapy device, the components, and the accessories.
- Always carry out a function check before using the unit (see chapter "Function check").

WM 67841a 08/2014

2.3 Warnings in this document

Warnings are used to flag up safety-relevant information.

You will find a warning preceding any action that entails a hazard for persons or equipment.

Warnings consist of

- the warning symbol (pictogram),
- a signal word designating the hazard level,
- information about the hazard
- instructions for avoiding the hazard.

The warnings appear in three hazard levels depending on the degree of danger:

⚠ DANGER	**Danger!** Designates an extremely dangerous situation. Failure to observe this warning will lead to serious, irreversible injury, or death.
⚠ WARNING	**Warning!** Designates an extremely dangerous situation. Failure to observe this warning may lead to serious, irreversible, or fatal injury.
⚠ CAUTION	**Caution!** Designates a dangerous situation. Failure to observe this warning may lead to minor or moderately serious injury.
NOTICE	**Notice!** Indicates a hazardous situation. Failure to observe this warning may lead to damage to equipment.
ℹ	Designates useful information relating to a particular action.

WM 67841a 08/2014

3 Product description

3.1 Therapy device overview

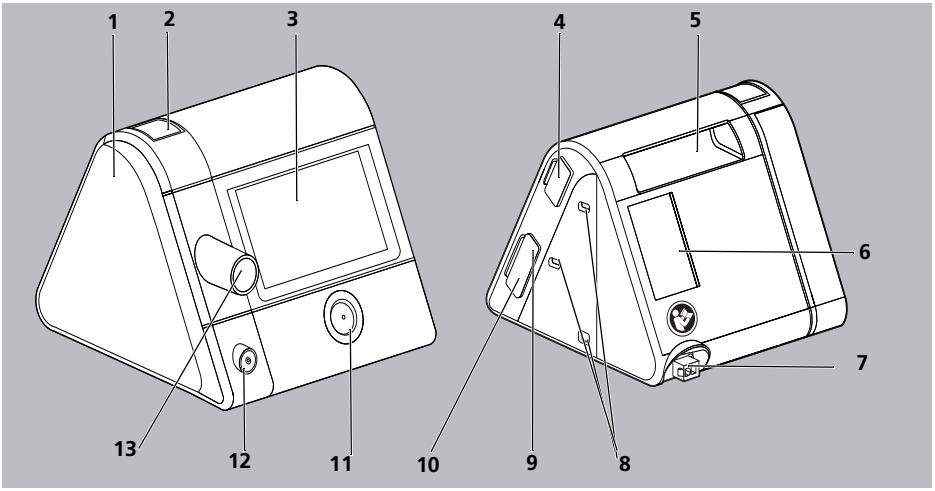

3-1 Therapy device

No.	Designation	Description
1	Cover	Covers the humidifier connection when no respiratory air humidifier is connected.
2	Unlocking button therapy device	Makes it possible to remove the cover in order to connect the humidifier prismaAQUA.
3	Display	Allows operation of the therapy device and the respiratory air humidifier. Displays settings and current values.
4	System interface	Connects the therapy device with modules.
5	Handle	Allows lifting and transporting of the therapy device.
6	Filter compartment in suction area	Houses the air filter and, where applicable, the pollen filter. The respiratory air is sucked in here and the dust particles filtered out.
7	Voltage input	Connects the therapy device to the power supply unit.
8	Mounting holes	Accept a module and secure it to the therapy device.
9	SD card slot	For inserting an SD card. The symbol in the display indicates the communication between the SD card and the therapy device.

WM 67841 a 08/2014

No.	Designation	Description
10	Micro USB port	Used for point-to-point connection with a PC on which prismaTS is installed. Allows settings to be changed on the therapy device and data to be exported.
11	On/off button	Switches the therapy device on and off. Switches the therapy device to standby mode. Starts and stops the therapy.
12	Hose heating system connection	Electrical power supply connection for a heatable hose.
13	Device output	Connection for the respiration hose, through which the patient is supplied with respiratory air.

3.2 Display

The information shown on the display depends on the current status of the therapy device:

- **Standby** mode (no therapy in progress)

  The time is shown, as is the wake-up time when the alarm is set (see "3.2 Display", page 17).
  Settings can be performed on the therapy device (see "6 Settings in the menu", page 62).

- **Therapy** mode (therapy in progress)

  There is a therapy in progress (see "3.2.2 Display in Therapy mode", page 19).
  You can perform the mask test and start the softSTART sleep aid (see "5 Operation", page 43).

- **Energy-saving** mode

  The therapy device is supplied with a very low level of power; nothing is shown on the display. You can return to the Standby mode by pressing the on/off button ⏻.

WM 67841a 08/2014

3.2.1 Display in Standby mode (Start screen)

3-2 Start screen in Standby mode

No.	Designation	Description
1	Info menu button	Provides access to the info menu.
2	Alarm with wake-up time	Alarm is set. Displays the set wake-up time.
3	Menu button	Provides access to the settings menus.
4	Dimmer button	Makes the display dark.
5	Time	Displays the current time.

WM 67841 a 08/2014

3.2.2 Display in Therapy mode

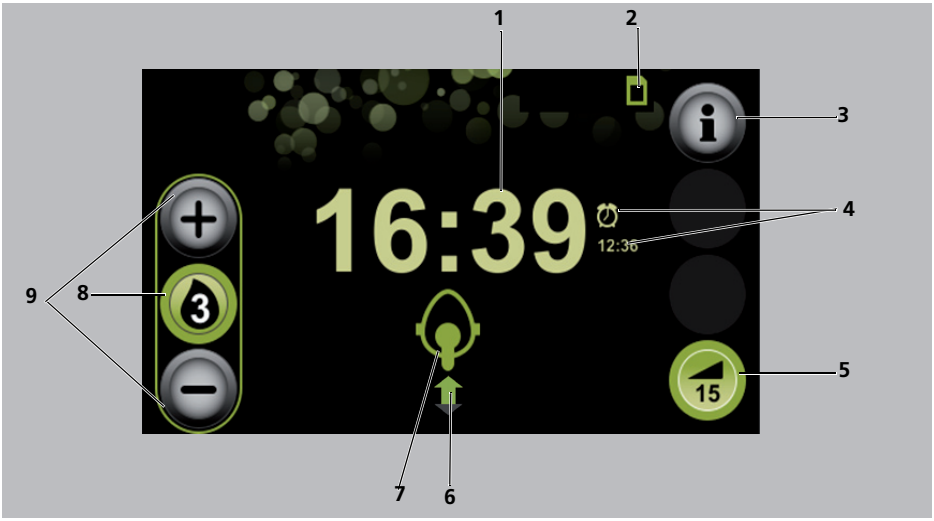

3-3 Start screen in Therapy mode

No.	Designation	Description
1	Time	Displays the current time.
2	SD card symbol	The SD card is inserted in the therapy device.
3	Info button	Provides access to the info screen with detailed information on the therapy currently in progress.
4	Alarm with wake-up time	Alarm is set. Displays the set wake-up time.
5	softSTART button	Switches the softSTART function on or off. Displays the time remaining. If the softSTART is switched off, the set softSTART period is displayed. If there is no softSTART button, the physician or authorized dealer has disabled this function.
6	Respiration status symbol	Displays the current respiration status.
7	Mask status symbol with leak indicator	Displays how well the respiratory mask is positioned.

WM 67841a 08/2014

No.	Designation	Description
8	Humidifier button for respiratory air humidifier prismaAQUA	Displays that the respiratory air humidifier is connected and switched on. Shows the set humidifier level of the respiratory air humidifier.
9	Function buttons for the respiratory air humidifier	Allow increasing/decreasing of humidifier level.

3.2.3 Symbols on the display

Symbol	Designation	Description
Device status symbols (shown on the top line of the display)		
	Filter symbols	Bacteria filter is connected and activated. If this symbol is displayed even though you are not using a bacteria filter, contact your authorized dealer.
		Air filter replacement required. (Symbol only appears if the authorized dealer has activated the reminder to change the air filter).
	Maintenance symbol	Maintenance required (symbol only appears when maintenance function is active).
	USB symbol	USB connection
	CONNECT symbol	prismaCONNECT module is connected
	(Green symbol) prisma2CLOUD symbol (Gray symbol)	prisma2CLOUD module is connected
		No connection to prisma2CLOUD module established.
PSG	(Green symbol) PSG symbol (Gray symbol)	prismaPSG module is connected
PSG		No connection to prismaPSG module established

WM 67841 a 08/2014

Symbol	Designation	Description
	(Green symbol) Network symbol (Gray symbol)	Network connection available. PC with prismaTS software is connected.
		No network connection available.
	SD card symbol	SD card in SD card slot. Symbol flashes: Data is being saved to the SD card or read off the SD card.
Symbols on the rest of the display		
	Respiratory air humidifier symbol	Respiratory air humidifier is connected and switched off.
		Respiratory air humidifier is connected and switched on. The set humidifier level is displayed.
		Respiratory air humidifier is connected and empty of water.
	Alarm symbol	Alarm is set. If no alarm symbol is shown: the alarm is switched off.
	Respiration status symbol	Displays the respiration status: • Arrow pointing upward: inhalation • Arrow pointing downward: exhalation • Green arrow, spontaneous respiration • Orange arrow, assisted breathing
		Apnea
	Mask status symbol with leak indicator symbol	Mask position is good, no leaks
		Mask is not well positioned, considerable leaks, the efficacy of the therapy is not guaranteed
	Hose diameter symbol	Specifies the diameter of the hose in mm.

WM 67841a 08/2014

Symbol	Designation	Description
●●● / ●●● / ●●●	Menu level symbol	Specifies the menu level that you are currently in: The more green dots, the deeper you are in the menu structure.
Alarm window		
	Alarm symbol	Low-priority alarm triggered
	(Black symbol) Mute symbol (Orange symbol)	Indicates that the acoustic signal for an alarm can be muted. Acoustic signal for alarm is muted.

WM 67841a 08/2014

3.3 Components

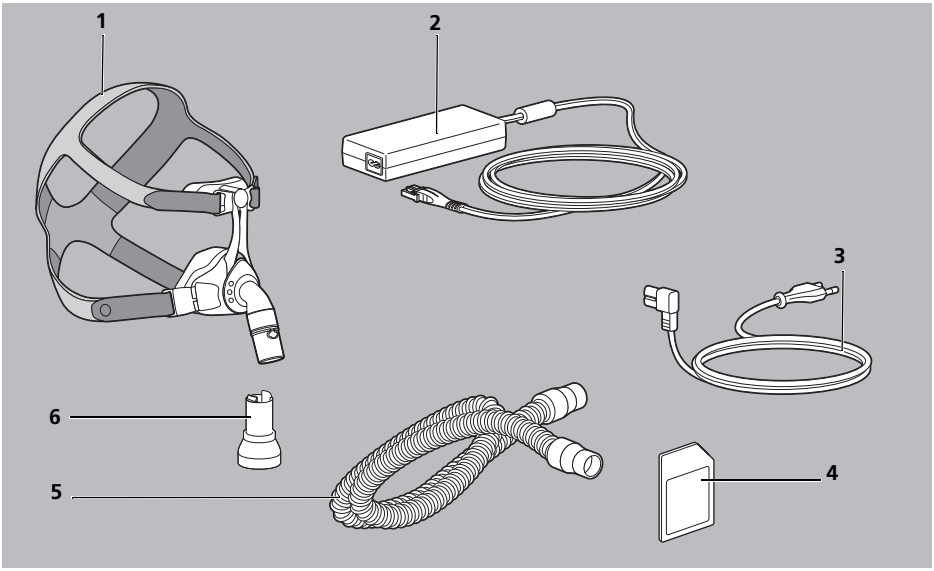

3-4 Components

No.	Designation	Description
1	Respiratory mask	Supplies the respiratory air to the patient.
2	Power supply unit with connection cable	Supplies power to the device. Connects the power supply unit to the therapy device.
3	Power supply cable	Connects the power supply unit to the power socket.
4	SD card	Records therapy data.
5	Respiration hose with 19-22 mm diameter	Connects the therapy device to the respiratory mask.
6	Exhalation system	If the mask does not feature an integrated expiratory system, the exhaled air escapes here during the therapy.

WM 67841a 08/2014

3.4 Accessories

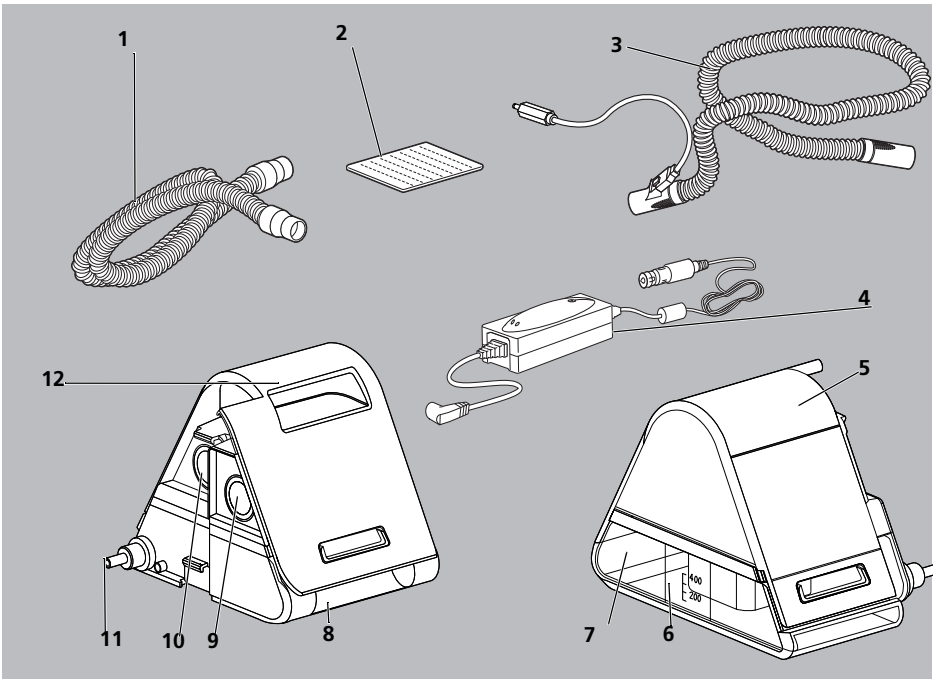

3-5 Accessories

No.	Designation	Description
1	Respiration hose with 15 mm diameter	Connects the therapy device to the respiratory mask.
2	Pollen filter (white filter)	Filters the suctioned respiratory air and prevents the ingress of fine dust particles, pollen and fungal spores. Recommended for patients with allergies.
3	Heatable hose	Avoids condensation in the respiration hose.
4	Inverter	Enables operation of the device via a DC power socket (12 V / 24 V).
Respiratory air humidifier prismaAQUA		
5	Top of humidifier	Seals the respiratory air humidifier.
6	Humidifier insert	Prevents water from escaping.
7	Base of humidifier	Holds the water for humidifying the respiratory air.
8	Lower recess	For opening the respiratory air humidifier.
9	Input	Connects the therapy device to the respiratory air humidifier.

WM 67841a 08/2014

No.	Designation	Description
10	Output	Connects the respiratory air humidifier to the device output.
11	Element	Heats the water in the respiratory air humidifier.
12	Upper recess	For lifting and transporting the respiratory air humidifier.

3.5 Labels and symbols

3.5.1 Labels on the therapy device

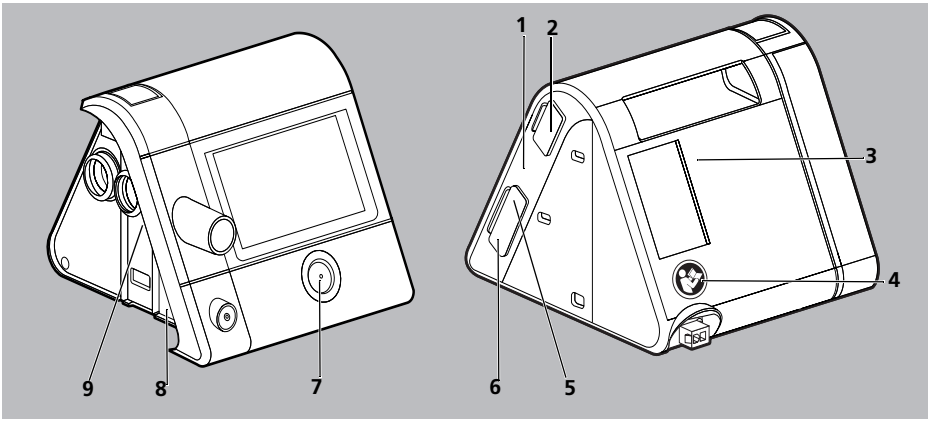

3-6 Labels on the therapy device

No.	Symbol	Description
Type plate on the right side of the therapy device		
1	**SN**	Serial number of the therapy device
		Year of manufacture
Labels and symbols on the therapy device		
2 , 8		Consult instructions for use
3		Device inlet: inlet for room air at ambient temperature

WM 67841a 08/2014

No.	Symbol	Description
4		Follow the instructions for use
5		Slot for SD card
6		USB port
7		On/off: Indicates the on/off button
9		Device output: Outlet for room air at 4 hPa to 30 hPa (depending on type of device)
Type plate on the underside of the therapy device		
	TYPE: WM 100 TD	Type designation of the therapy device
	37V ⎓	37 V DC
	IP21	Degree of protection against solid foreign bodies. The device is protected against dripping water.
		Degree of protection against electric shock: Protection class II device
		Do not dispose of device in household waste
		Suitable for use in airplanes. Complies with RTCA/DO-160G chapter 21, Category M.
		Type BF applied part
		Manufacturer
	CE 0197	CE mark (confirms that the product complies with the applicable European directives)

WM 67841 a 08/2014

3.5.2 Labels on the respiratory air humidifier

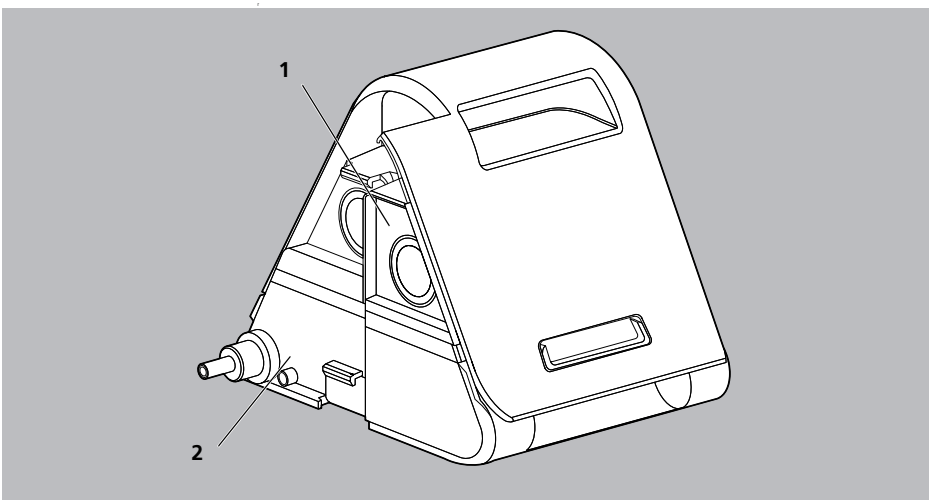

3-7 Labels on the respiratory air humidifier

No.	Symbol	Description
1		Fill with water
2		Respiratory air humidifier is heated. Do not touch the element!
Labels and symbols on the underside		
		Do not dispose of device in household waste
	CE 0197	CE mark (confirms that the product complies with the applicable European directives)
	32 V DC	32-volt direct current
		Type BF applied part
	IP22	IP protection class: Degree of protection against solid foreign bodies. The device is protected against dripping water.
	>PC<	Material designation: Polycarbonate

WM 67841a 08/2014

No.	Symbol	Description
		Date of manufacture (month/year)
	Type: WM100TH	Type designation: Device in the WM 100 TH
		Consult instructions for use
	SN	Serial Number

3.5.3 Labels on the type plate of the power supply unit

Symbol	Description
Input: 100-240 V, 50-400 Hz, 1.5 A	Input voltage: 100-240 V, 50-400 Hz, 1.5 A
Output: 37 V ⎓ 2.43 A	Output voltage 37 V DC 2.43 A
	GOST-R certification (confirms that the product complies with the applicable Russian directives)
	China RoHS label (confirms that the product does not emit toxic substances for the number of years indicated)
	PSE mark (confirms that the product complies with the applicable Japanese directives)
	Only intended for indoor use.
	Degree of protection against electric shock: Protection class II device
	Do not dispose of device in household waste
	CE mark (confirms that the product complies with the applicable European directives)

WM 67841a 08/2014

Symbol	Description
IP21	IP protection class: Degree of protection against solid foreign bodies. The device is protected against dripping water.

3.5.4 Labels on the therapy device packaging

Symbol	Description
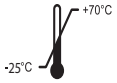	Permissible storage temperature: -25°C to 70°C
	Permissible storage humidity: 15% to 93% relative humidity

3.5.5 Labels on the respiration hose packaging

Symbol	Description
	For use on one patient only!

4 Preparation

4.1 Setting up the therapy device

NOTICE

Material damage due to overheating!
Temperatures which are too high can cause the therapy device to overheat and damage the device.
⇒ The therapy device and power supply unit must not be covered with textiles (e.g., bedclothes).
⇒ Do not operate the therapy device close to heating systems.
⇒ Do not expose the therapy device to direct sunlight.
⇒ Do not operate the therapy device in the transport bag.

1. Place the therapy device on a flat surface (e.g., a bedside table).
2. Leave the suction area of the therapy device uncovered.
3. Keep the power plug and power socket accessible at all times.
4. Pull the protective foil off the device.

Result The therapy device is set up properly.

4.2 Connecting components

4.2.1 Connecting up the power supply

⚠ WARNING

Risk of injury due to electric shock when connecting an incorrect power supply unit to the line power!
The power supply unit contains a safety device to prevent electric shock. The use of a non-original power supply unit may result in injury to the user and the patient.
⇒ Only operate the device on line power using the power supply unit recommended by Weinmann.

WM 67841 a 08/2014

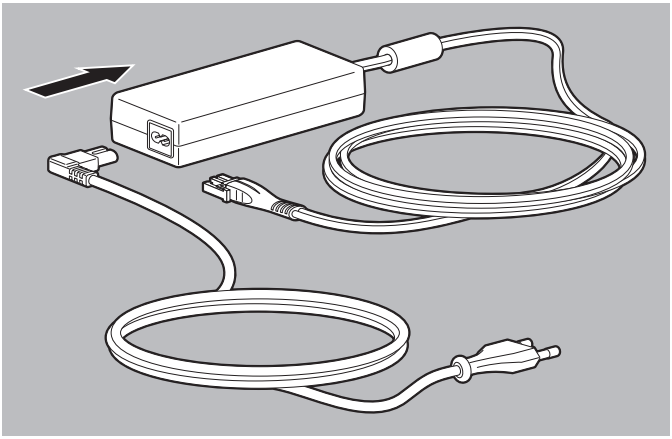

1. Connect the power supply cable with the power supply unit.

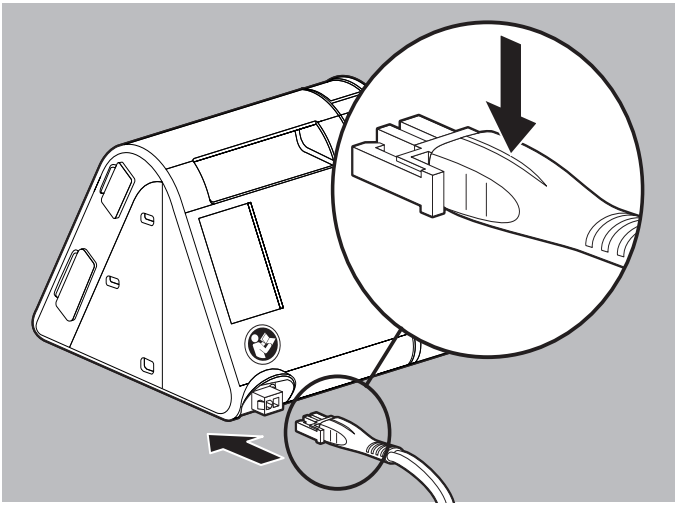

2. Insert the free connector of the power supply unit's connection cable into the power supply port on the therapy device. When doing so, pay attention to the alignment of the connector.

i

If you want to operate the therapy device at 12 V or 24 V, connect the optionally available inverter WM 24616 (12 V) or WM 24617 (24 V) to the device.

WM 67841a 08/2014

3. Plug the free end of the power supply cable in the power socket.
   The power supply unit adjusts to the line voltage (110 V or 240 V) automatically.
   The LED on the power supply unit lights up green.

Result The power supply is connected.
The therapy device is switched on and in **Standby** mode.

If you want to disconnect the therapy device from the power supply, press the clip on the connector and pull the connector out. Do not pull on the power supply cable.

4.2.2 Connecting up the respiration hose

Risk of injury due to contaminated or infected patient hose system!
A patient hose system contaminated or infected due to lack of or incorrectly performed hygienic preparation procedures can pass contamination or infection on to the next patient and cause injuries.
⇒ Do not reprepare disposable hose systems.
⇒ Use a bacteria filter
⇒ Hygienically prepare reusable hose systems correctly (see "7.4 Hygienic preparation of the respiration hose", page 69).

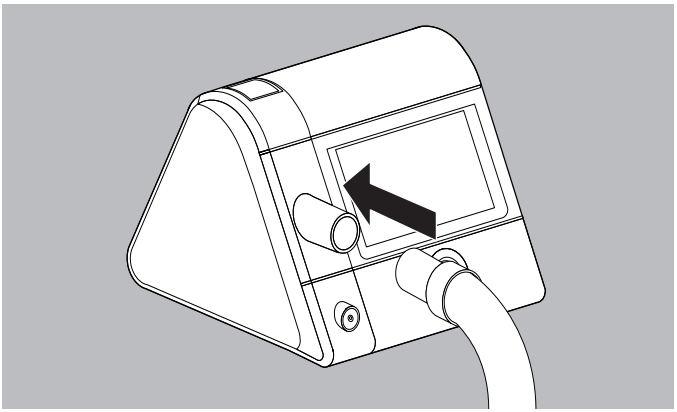

1. Connect the respiration hose to the device outlet.

WM 67841a 08/2014

⚠ CAUTION

Risk of asphyxia when using full face masks without exhalation system!

When using full face masks without an integrated exhalation system the CO_2 concentration can increase to critical values and endanger the patient.

⇒ Use full face masks with an external exhalation system if there is no exhalation system integrated.

⇒ Observe the instructions for use of the exhalation system.

2. If not integrated: Insert the external exhalation system between the respiratory mask and the respiration hose (see instructions for use of the respiratory mask and the exhalation system).

⚠ CAUTION

Risk of injury due to incorrectly positioned respiration hose!

An incorrectly positioned respiration hose can injure the patient.

⇒ Never place the respiration hose around the neck.

⇒ Do not use any small parts to fix the respiration hose in position as they might be accidentally swallowed.

⇒ Do not squash the respiration hose.

3. Connect the mask with the respiration hose.
4. Check whether the hose diameter used is set in the therapy device (see "6.2 Setting accessories parameters", page 63).
5. Put on the respiratory mask (see instructions for use of the respiratory mask).
6. Start the therapy (see "5.4 Starting the therapy", page 46).
7. Perform a mask test to check the positioning of the mask (see "5.6 Performing a mask test", page 49).

Result The respiration hose is connected.

WM 67841a 08/2014

4.3 Connecting optional accessories

4.3.1 Connecting the oxygen safety valve

⚠ WARNING

Risk of injury from burning oxygen!
Supplying oxygen without special safety equipment can cause fires and injure people.
⇒ Always use an oxygen safety valve.
⇒ Observe the information on the safe handling of oxygen.
⇒ Observe the instructions for use for the oxygen safety valve and the oxygen supply unit.

1. Insert the oxygen safety valve Respironics No. 302418 between the respiration hose and the device outlet.

Result The oxygen safety valve is connected.

4.3.2 Connecting the respiratory air humidifier

Filling the respiratory air humidifier

NOTICE

Material damage due to overfilling!
Any escaping water can enter the device and damage it.
⇒ Remove the respiratory air humidifier from the device before filling.
⇒ Only fill the respiratory air humidifier up to the *max* mark.

Requirement The respiratory air humidifier is removed from the therapy device (see "4.3.3 Removing the respiratory air humidifier after use", page 38).

WM 67841a 08/2014

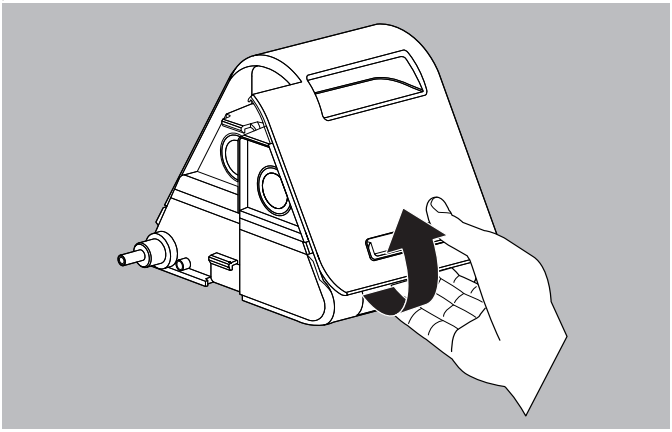

1. To open the respiratory air humidifier, grip the lower recess on the rear of the housing and press the rear of the housing gently with your thumb.
2. Remove the top of the humidifier.
3. If present: Pour out the water in the base of the humidifier.
4. Clean the respiratory air humidifier (see "7.4 Hygienic preparation of the respiration hose", page 69).

NOTICE

Material damage due to hot water and aromatic additives!
Hot water or aromatic additives (e.g., eucalyptus oil) can damage the housing of the respiratory air humidifier and the element.
⇒ Do not fill with hot water.
⇒ Do not use any aromatic additives.

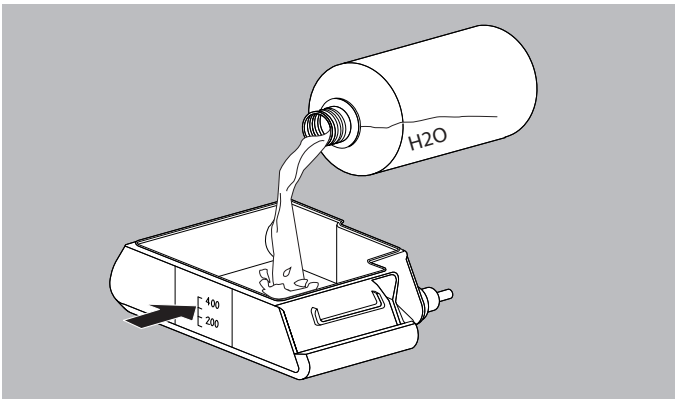

5. Fill the base of the humidifier with fresh, cold water up to the mark (max. 400 ml).

Sterile or boiled water is only required in exceptional medical cases when using this device at home. Do not use distilled water for technical purposes, as it could contain microbiological pollution.

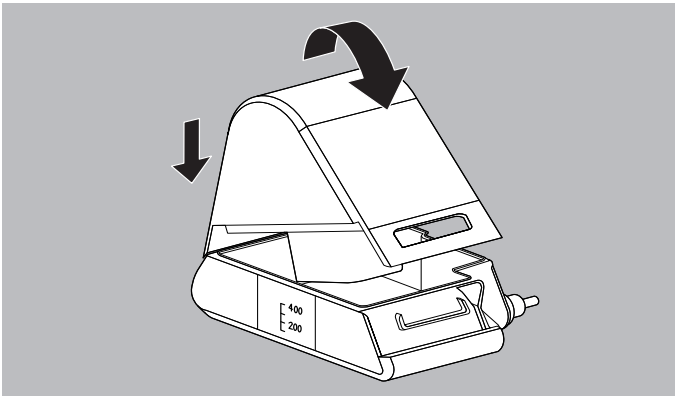

6. Place the top of the humidifier on the base of the humidifier from the back and press it on gently until it clicks into place.
7. Check whether the humidifier is correctly sealed or whether water can leak out. To do so, run your hand over the underside of the device.
8. Fit the respiratory air humidifier to the therapy device (see " Installing the respiratory air humidifier", page 37).

Result The respiratory air humidifier is filled.

WM 67841a 08/2014

Installing the respiratory air humidifier

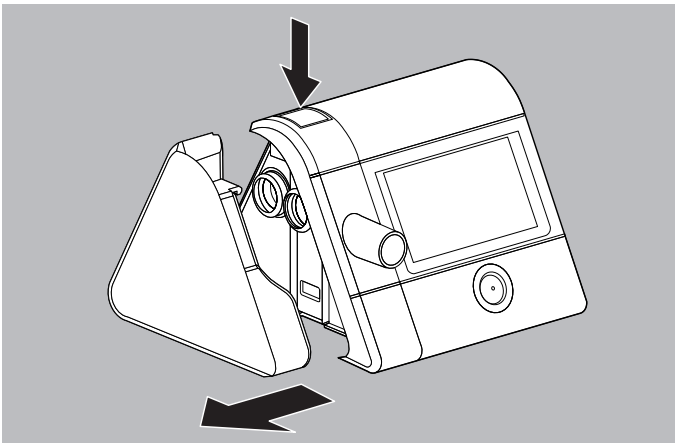

1. Press the unlocking button on the therapy device to remove the side cover of the therapy device.
2. Fill the respiratory air humidifier with water (see " Filling the respiratory air humidifier", page 34).

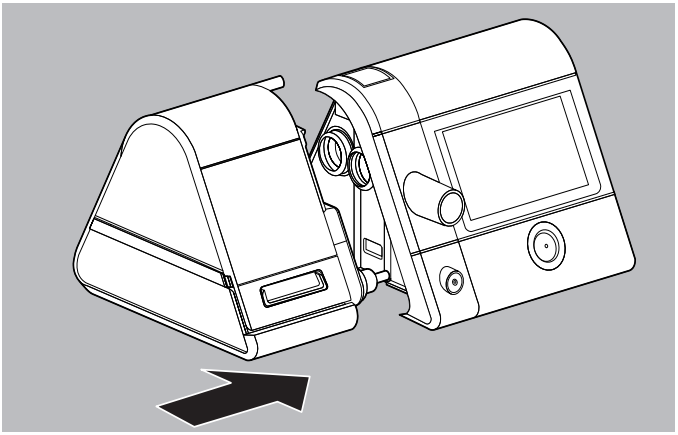

3. Push the respiratory air humidifier into the therapy device from the side on a flat surface until the unlocking button clicks into place audibly.
4. Pull the protective foil off the respiratory air humidifier.

Result The respiratory air humidifier is connected to the therapy device.

WM 67841a 08/2014

- When the therapy device is in **Standby** mode: The humidifier button is shown in gray on the therapy device's display.
- When the therapy device is in **Therapy** mode: The humidifier button is shown in green 4 on the therapy device's display with the currently set humidifier level.

4.3.3 Removing the respiratory air humidifier after use

⚠ CAUTION

Risk of injury from hot element!
During and shortly after operation, the element of the respiratory air humidifier is hot and touching it can cause burns.
⇒ Allow the element to cool down completely.
⇒ Avoid touching the element.

Requirement The therapy device is switched off.

1. Press the unlocking button on the therapy device.

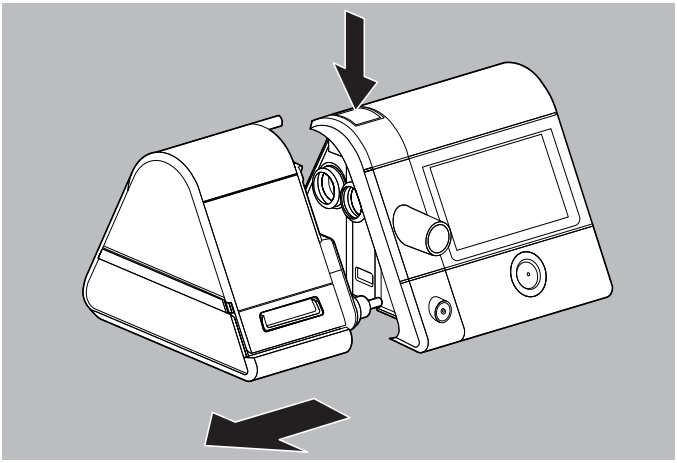

2. The respiratory air humidifier is removed from the side of the therapy device.

WM 67841a 08/2014

⚠ CAUTION

Risk of infection due to germs in stagnant water!
Germs and bacteria can easily take hold and multiply in stagnant water.
⇒ Remove the water from the respiratory air humidifier after every use.
⇒ Clean the respiratory air humidifier regularly.
⇒ Only use the respiratory air humidifier with fresh water.

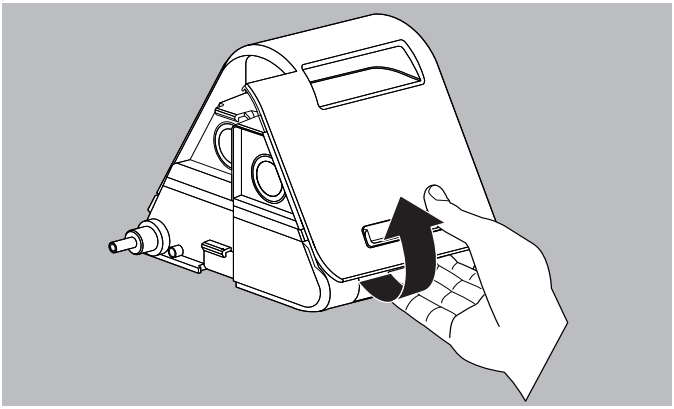

3. To open the respiratory air humidifier, grip the lower recess on the rear of the housing and press the rear of the housing gently with your thumb.
4. Remove the top of the humidifier.
5. Pour out any water remaining in the base of the humidifier.
6. Clean the respiratory air humidifier (see "7.5 Hygienic preparation of the respiratory air humidifier", page 70).

WM 67841a 08/2014

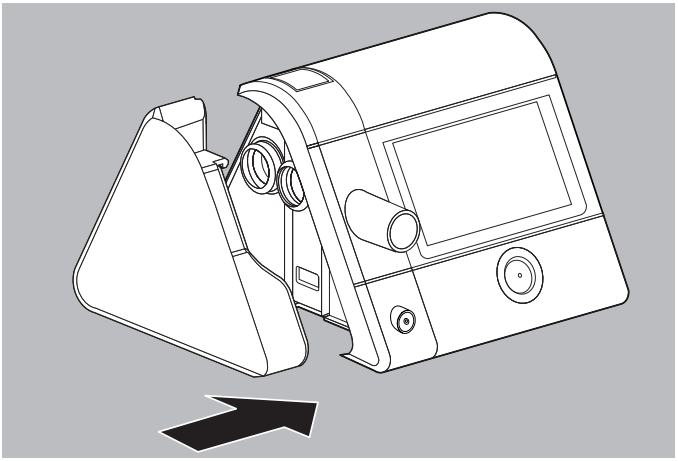

7. To use the therapy device without the respiratory air humidifier in the future, insert the cover in the therapy device from the side until the unlocking button clicks into place audibly.

Result The respiratory air humidifier is removed.

4.3.4 Alternative filling for nighttime: Topping up water

If there is no more water left in the respiratory air humidifier, the therapy device automatically switches the respiratory air humidifier off. The humidifier button is orange .

To continue the therapy with the respiratory air humidifier as soon as possible, you can top up the water.

NOTICE

Material damage due to overfilling!
Any escaping water can enter the device and damage it.
⇒ Remove the respiratory air humidifier from the device before filling.
⇒ Only fill the respiratory air humidifier up to the *max* mark.

Requirement There is no more water in the respiratory air humidifier.

1. End the therapy (see "5.5 Ending the therapy", page 48).
2. Press the unlocking button on the therapy device.

WM 67841a 08/2014

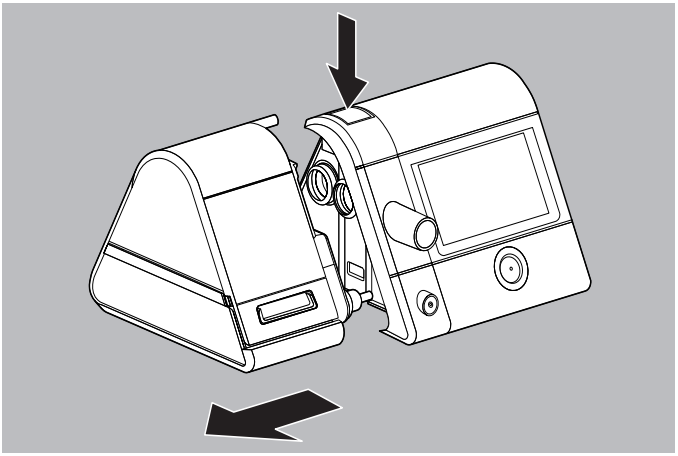

3. The respiratory air humidifier is removed from the side of the therapy device.

⚠ CAUTION

Risk of injury from hot element!
During and shortly after operation, the element of the respiratory air humidifier is hot and touching it can cause burns.
⇒ Allow the element to cool down completely.
⇒ Avoid touching the element.

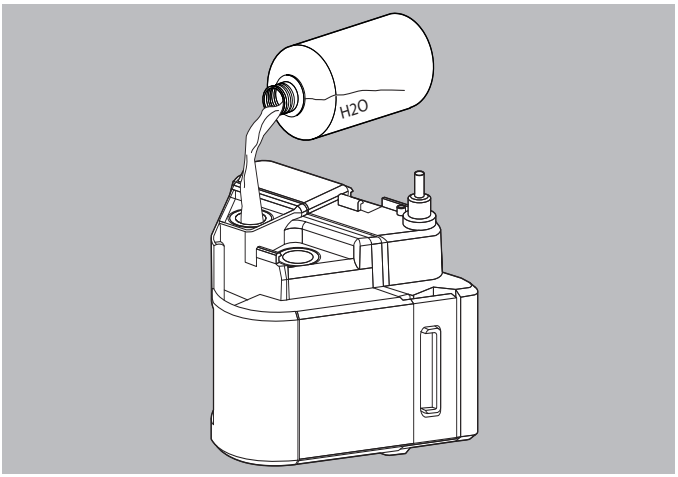

4. Tilt the respiratory air humidifier carefully to the left and place it on its side.

WM 67841a 08/2014

NOTICE

Material damage due to hot water and aromatic additives!
Hot water or aromatic additives (e.g., eucalyptus oil) can damage the housing of the respiratory air humidifier and the element.
⇒ Do not fill with hot water.
⇒ Do not use any aromatic additives.

5. Fill fresh, cold water up to the marking on the underside (max. 400 ml) through the inlet.

Sterile or boiled water is only required in exceptional medical cases when using this device at home. Do not use distilled water for technical purposes, as it could contain microbiological pollution.

6. Set the respiratory air humidifier upright again carefully.
7. Install the respiratory air humidifier on the therapy device (see " Installing the respiratory air humidifier", page 37).
8. Start the therapy again (see "5.4 Starting the therapy", page 46).

Result The respiratory air humidifier is filled.

5 Operation

5.1 Navigating the menu

You configure all the settings in the menu via the display. Press the required field directly on the display.

Button	Function
	Go back a screen
	Go forward a screen
	Select values: • If the parameter can have exactly 2 possible values (e.g., on/off): press the button. The value changes to the other one. • If the parameter can have a range of different values, press the button and select the value from the overview.
	Increase or decrease value
	Confirm value
	Reject value
	Go back to start screen (Standby or Therapy mode)

5.2 Switching on the therapy device

5.2.1 Switching on the therapy device for the first time

Before the first therapy is performed, the therapy device must be configured. If your authorized dealer has not done so already, configure the following settings.

WM 67841a 08/2014

NOTICE

Material damage if power supply is interrupted during configuration!
If the power supply is interrupted prematurely, the configuration will not be performed correctly.
⇒ Leave the therapy device connected to the power supply throughout the configuration.
⇒ Only disconnect the power supply once the **Configuration successful** message has appeared.

1. Connect up the power supply (see "4.2.1 Connecting up the power supply", page 30).
2. Select your preferred language.

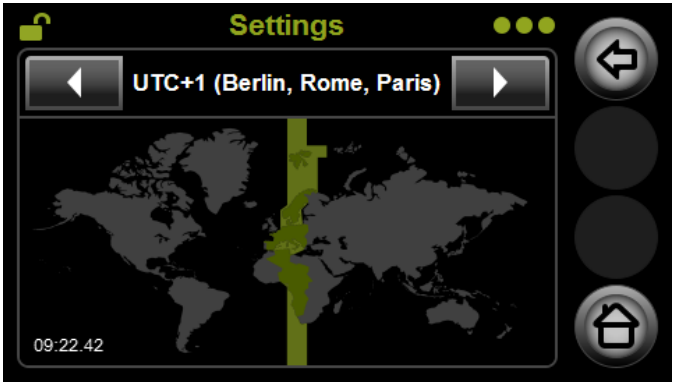

3. Select your time zone with the arrow keys ◀ and ▶.

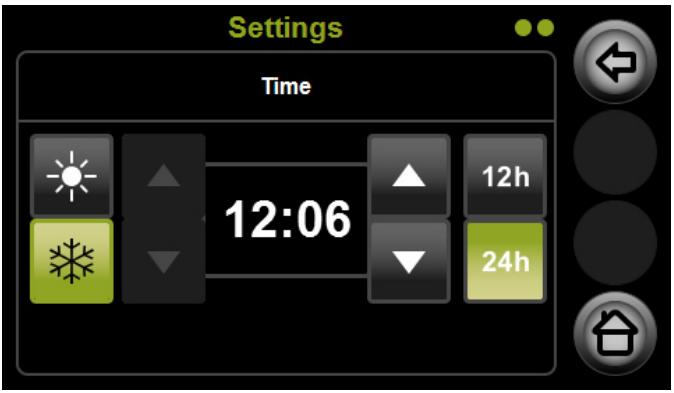

4. Set the time:

WM 67841a 08/2014

- Select daylight saving time or standard time. Click on the symbol with the gray background to select it. The background turns green when the setting is activated.
- Use the arrow keys on the right to set the minutes.
- Select the clock version: 24 h (0-24) or 12 h (0-12)

5. Confirm the set time with the button.

Result The therapy device is switched on and configured.
The set language and time settings are saved.
The therapy device is in the **Standby** mode (see "3.2.1 Display in Standby mode (Start screen)", page 18).

If you have received an SD card from your authorized dealer with the configuration, please insert the SD card in the therapy device (see "5.11.1 Inserting the SD card", page 58).
The settings are then automatically transferred to the therapy device.

5.2.2 Switching the therapy device on each time

The therapy device can assume 3 different modes:

- **Standby** mode (no therapy in progress)
- **Therapy** mode (therapy in progress)
- **Energy saving** mode (display is off to save energy during the day)

1. To switch the therapy device to **Standby** mode, connect up the power supply (see "4.2.1 Connecting up the power supply", page 30).
2. If the display remains off, the therapy device is in **Energy saving** mode: Press the on/off button .

Result The therapy device is in the **Standby** mode (see "3.2.1 Display in Standby mode (Start screen)", page 18).

After being switched on, the device displays the patient-related operating hours for 30 seconds.

5.3 Switching off the therapy device

1. To save energy during the day, keep the on/off button ⏻ depressed for 3 seconds.

   or

   If the automatic energy saving function is activated: the therapy device switches to the **Energy saving** mode automatically 15 minutes after the user has performed the last action.

Result The therapy device is in the **Energy saving** mode.

The automatic energy saving function can be activated in the menu *Main menu* | *Device* | *Energy saving* (see "6.4 Setting device parameters", page 64).

The therapy device does not switch to the **Energy saving** mode automatically if:

- there is a therapy in progress;
- there is a USB cable inserted;
- data are being exported;
- a message appears on the display.

5.4 Starting the therapy

1. Connect the components (see "6.1 Setting comfort parameters", page 62).
2. Connect the power supply (see "4.2.1 Connecting up the power supply", page 30).
3. If the display remains off, the therapy device is in **Energy saving** mode: Press the on/off button ⏻.

   The therapy device switches to the **Standby** mode.
4. Press the on/off button ⏻.

   or

   If the autoSTART-STOP function is activated: breathe into the mask.

You can activate the autoSTART-STOP function in the menu *Main menu* | *Comfort* | *autoSTART-STOP* (see "6.1 Setting comfort parameters", page 62).

WM 67841a 08/2014

Result The therapy starts.
The start screen is shown in the **Therapy** mode.

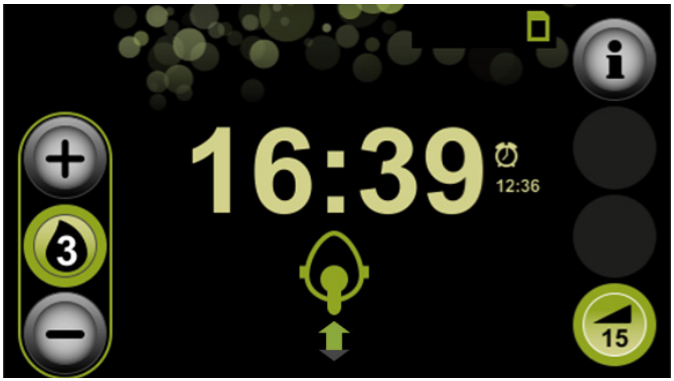

If you want to view detailed information on your therapy: Press the info button .

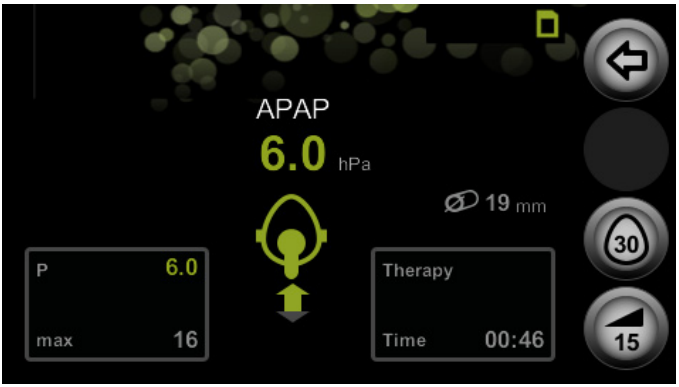

To allow you to sleep undisturbed, the display automatically turns dark after 30 seconds. The therapy continues normally. As soon as you press the display, the start screen is shown in the **Therapy** mode again.

5.5 Ending the therapy

1. Press the on/off button ⏻ .

   or

   If the autoSTART-STOP function is activated: Remove the respiratory mask.
   The therapy device is automatically ended after 5 seconds.

i You can activate the autoSTART-STOP function in the menu *Main menu* | *Comfort* | autoSTART-STOP (see "6.1 Setting comfort parameters", page 62).

Result The therapy is ended.
The therapy data for the last therapy session is shown briefly if the physician or authorized dealer has enabled this function. In all other cases, the usage time is displayed.

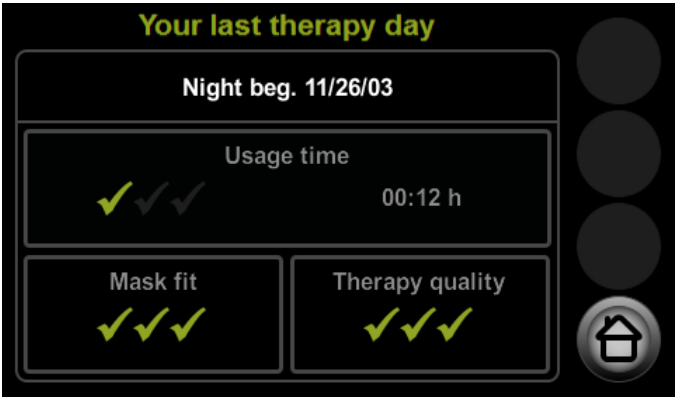

The more green checks are shown (max. 3), the better the result.

i If you want to end the therapy prematurely during the night, you can use the dimmer button on the start screen to turn the display dark and sleep undisturbed.
The therapy device is still supplied with power and the alarm function remains activated. As soon as you touch the display, the start screen is shown in the **Standby** mode again.

WM 67841a 08/2014

5.6 Performing a mask test

The therapy device is equipped with a mask test function. To minimize the risk of leaks and test the correct positioning of the mask even at higher pressures, you can perform a mask test before starting the therapy.

Requirement

- The mask test function has been enabled by the physician or authorized dealer.
- The therapy device is in **Therapy** mode.

1. Press the button.
2. To start the mask test, press the mask test button. The remaining time in seconds is shown.
3. Check the seal of the mask against what is shown on the display:

Symbol	Meaning
	Mask position is good, no leaks
	Mask is not well positioned, considerable leaks, the efficacy of the therapy is not guaranteed

4. If necessary: Adjust the mask straps.
5. Wait until the therapy device automatically ends the mask test after 30 seconds.

   or

   To end the mask test prematurely, press the mask test button .

Result The mask test is performed.

If you switch the softSTART on during the mask test, the mask test is automatically switched off.

5.7 Switching softSTART on/off

The softSTART function makes it easier to get used to the ventilation pressure when falling asleep. You can set a pressure different to the prescribed therapy pressure. When switched on, the therapy device sets this softSTART pressure. The pressure then increases slowly within the specified period or drops after the specified period (maximum 45 minutes) to the therapy level.

This function is suitable for patients who find a high or low pressure uncomfortable when awake and cannot fall asleep.

Requirement

- The softSTART function has been enabled by the physician or authorized dealer.
- A softSTART pressure is set (see "6.1 Setting comfort parameters", page 62).

1. Start the therapy (see "5.4 Starting the therapy", page 46).
2. If softSTART was activated during the last therapy: softSTART starts automatically when the therapy starts.

   or

   Press the softSTART button to switch softSTART on. The remaining time in minutes is shown.
3. Press the softSTART button to switch softSTART off. The set softSTART time in minutes is shown.

When running, a mask test will only interrupt softSTART and it will be restarted after the mask test.

WM 67841 a 08/2014

5.8 Setting the respiratory air humidifier

5.8.1 Switching on the respiratory air humidifier

The respiratory air humidifier switches on automatically when you start the therapy (see "5.4 Starting the therapy", page 46).

You can also preheat the humidifier to ensure that the water in the respiratory air humidifier has already reached the required temperature by the start of the therapy. Please note that the respiratory air humidifier will switch itself off again automatically after 30 minutes of preheating.

Requirement

- The therapy device is in **Standby** mode.
- The respiratory air humidifier is filled with water (see " Filling the respiratory air humidifier", page 34).
- The respiratory air humidifier is connected (see " Installing the respiratory air humidifier", page 37).
  The humidifier button is gray .

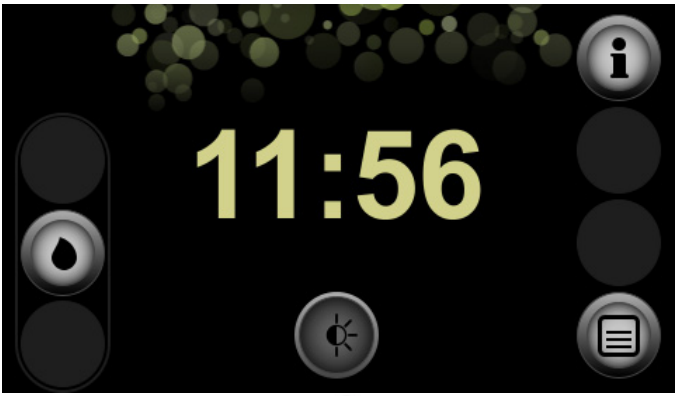

1. Press the humidifier button .

Result

The respiratory air humidifier is switched on.
The humidifier button is green and the humidifier level is shown .

5.8.2 Switching off the respiratory air humidifier

The respiratory air humidifier switches off automatically when you end the therapy (see "5.5 Ending the therapy", page 48).

You can also switch the respiratory air humidifier off during the therapy.

Requirement

- The therapy device is in the **Therapy** mode.
- The respiratory air humidifier is connected to the therapy device.
- The respiratory air humidifier is switched on.
  The humidifier button is green .

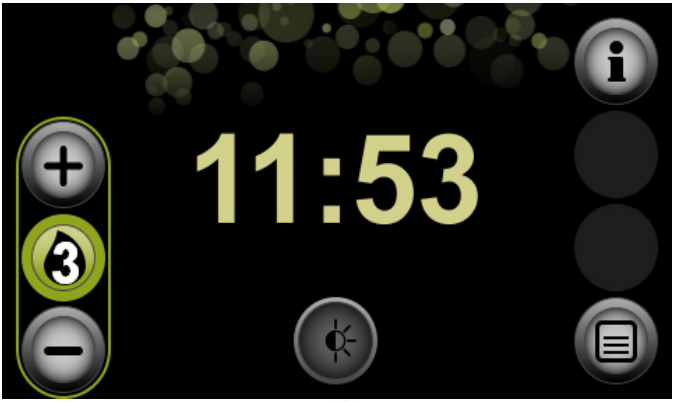

1. Press the humidifier button .

Result The respiratory air humidifier is switched off.
The humidifier button is gray .

If there is no more water left in the respiratory air humidifier, the respiratory air humidifier switches off automatically. The humidifier button is orange (see "4.3.4 Alternative filling for nighttime: Topping up water", page 40).

WM 67841a 08/2014

5.8.3 Setting the humidifier level

Requirement

- The therapy device is in the **Standby** or **Therapy** mode.
- The respiratory air humidifier is filled with water (see " Filling the respiratory air humidifier", page 34).
- The respiratory air humidifier is connected to the therapy device (see " Installing the respiratory air humidifier", page 37).
- The respiratory air humidifier is switched on (see "5.8.1 Switching on the respiratory air humidifier", page 51).
  The humidifier button is green and the humidifier level is shown 4 .

1. The + and − buttons can be used to increase or decrease the humidifier level.

There are seven humidifier levels available (1-7). The level which is suitable for you depends on the room temperature and the humidity. The standard setting is level 4. If you wake up with dry airways, the heating is set too low. If there is condensation in the respiration hose in the morning, the heating is too high.
To reduce condensation in the respiration hose, we recommend using a hose heating system.

Result The humidifier level is set.

5.9 Setting the alarm

5.9.1 Setting the wake-up time and switching on the alarm

Requirement The therapy device is in **Standby** mode.

1. Press the time display on the start screen.

   or

   Press the menu button .

   Press the **Time** field.
2. Press the **Wake-up time** field.
3. To switch the alarm on, press the alarm button .

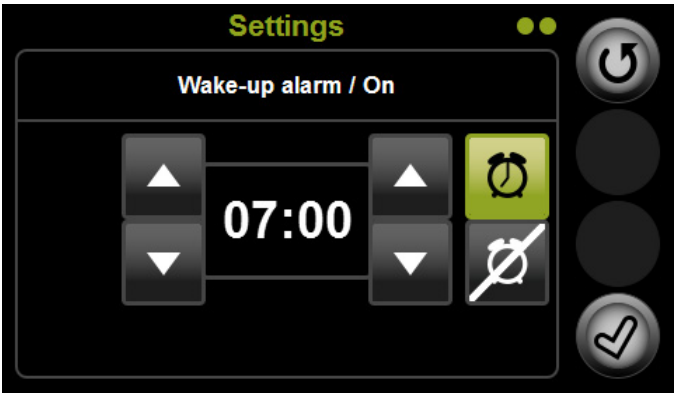

4. To set the wake-up time, use the left arrow keys to select the hours and the right arrow keys to select the minutes.
5. Confirm the settings with the button.
6. To return to the start screen, press the Home button .

Result The wake-up time is set and the alarm is switched on.

WM 67841 a 08/2014

5.9.2 Switching off the alarm

Requirement The alarm is ringing.

1. To snooze the alarm for 5 minutes, press the **Pause** field.
2. To turn the alarm off for today, press the **Off** field.
   The alarm will go off the following day again at the set wake-up time.

Result The alarm is switched off.

5.9.3 Deactivating the alarm

Requirement

- The therapy device is in **Standby** mode.
- The alarm is switched on (see "5.9.2 Switching off the alarm", page 55).

1. Press the time display on the start screen.

   or

   Press the menu button .

   Press the **Time** field.
2. Press the **Wake-up time** field.
3. Press the alarm button .
4. Confirm the setting with the button.
5. To return to the start screen, press the Home button .

Result The alarm is deactivated.
If you want to be woken up again, you will need to switch it on again (see "5.9.1 Setting the wake-up time and switching on the alarm", page 54).

5.10 Viewing therapy data and device information

In the info menu you can view information about the therapy (usage time, mask fit, therapy quality) within a selectable period of time and general information about the device and network.

If your device only displays the usage time and not the mask fit and the therapy quality, your physician or authorized dealer will need to enable this function.

Requirement The therapy device is in **Standby** mode.

1. Press the info button .

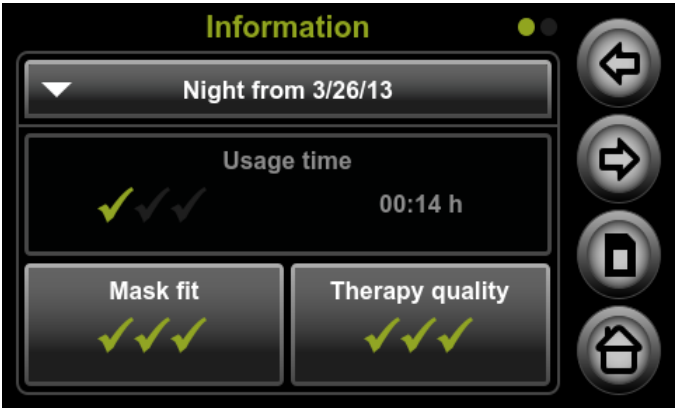

2. If necessary: To view therapy data from a night other than the previous night, select the desired date in the list .

WM 67841a 08/2014

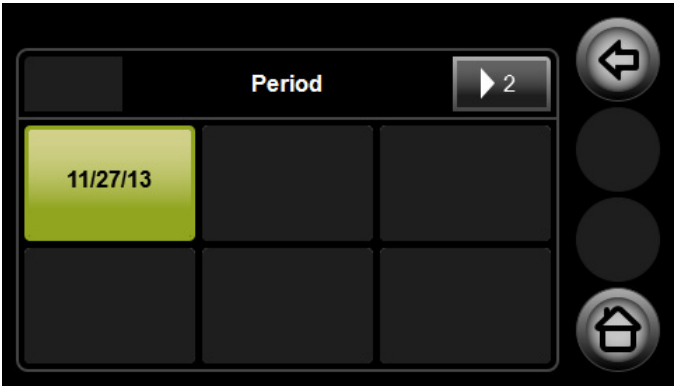

3. If necessary: To view a longer period of time, navigate to the second screen 2.

4. Select the required period.
5. To go back a screen, press the arrow key .

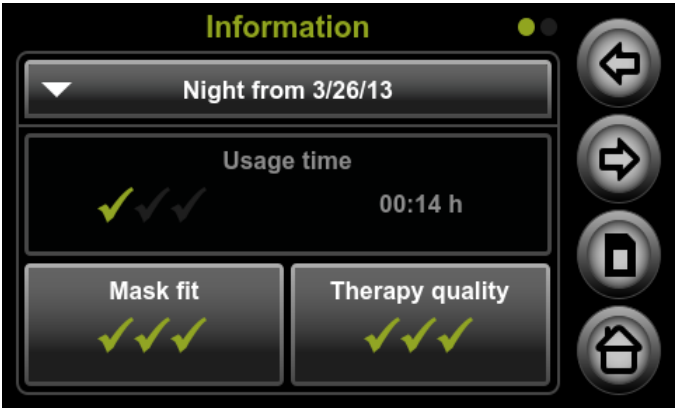

6. If required, save all the data to the SD card (see " Saving the therapy data manually", page 60).
7. To view the device information, navigate to the next screen using the arrow keys and .
8. To exit the info menu, press the Home button .

Result The therapy data and device information are called up.

5.11 Using the SD card

An SD card is not necessarily required for the operation of the therapy device. The therapy data and settings are stored internally in the device.

NOTICE

Loss of data due to incorrect SD card!
SD cards not purchased from Weinmann may have reduced functionality or result in the loss of data.
⇒ Only use SD cards from brand manufacturers which comply with the specifications (see chapter "Annex, Technical data").
⇒ Do not use the SD card for third-party files.

5.11.1 Inserting the SD card

Requirement The therapy device is in **Standby** mode.

1. Open the SD card slot cover.

WM 67841a 08/2014

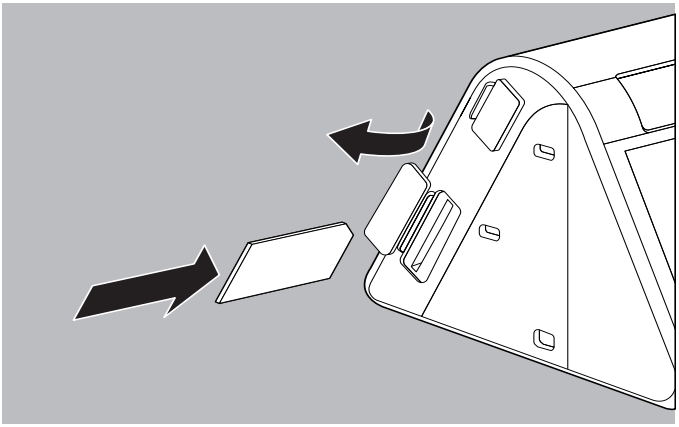

2. Slide the SD card into the SD card slot until it audibly clicks into place.
   When doing so, note: The beveled corner of the SD card must be at the top and facing the device during insertion.
3. Close the SD card slot cover.

Result The SD card is inserted in the therapy device and ready for use. After the device is switched on, the SD card symbol appears in the status line of the display.

5.11.2 Saving therapy data to the SD card

NOTICE

Data loss in case of power loss!
Data may be lost if the therapy device is disconnected from the power supply during the saving process.
⇒ Keep the therapy device connected to the power supply during the saving process (SD card symbol flashes).

Autosave

The therapy device saves the therapy data automatically in the following events:

- Each time you end a therapy.
- Each time you insert an SD card. Only insert SD cards when the device is in **Standby** mode.
- When the therapy device is reconnected to the power supply after a saving process is interrupted.

Saving the therapy data manually

Requirement

- The SD card is inserted in the therapy device (see "5.11.1 Inserting the SD card", page 58).
- The info menu with the therapy data for the requested period is open (see "5.10 Viewing therapy data and device information", page 56).

1. To save all the therapy data to the SD card, press the SD card button .
2. Press the **Save all data** field and confirm with the **OK** field.

Result The SD card symbol flashes in the display and the data is written onto the SD card.

5.11.3 Removing the SD card

Requirement

- The therapy device is in the Standby mode.
- The SD card symbol is no longer flashing.

1. Open the SD card slot cover.
2. Briefly press in the SD card.
   The SD card is ejected slightly.

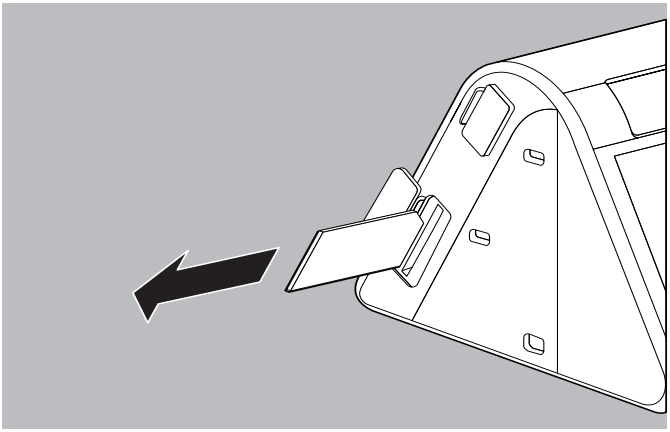

3. Remove the SD card.
4. Close the cover of the SD card slot.

Result The SD card is removed.

WM 67841 a 08/2014

5.11.4 Sending the SD card

1. Remove the SD card (see "5.11.3 Removing the SD card", page 60).
2. Label the SD card with the name and date of birth in order to avoid confusion when it reaches the physician or authorized dealer.

The SD cards available from Weinmann have a field that you can write in.

3. Insert the SD card in the protective wallet included in the scope of supply.
4. Send the SD card to the physician or authorized dealer.

WM 67841a 08/2014

6 Settings in the menu

You can configure settings for the comfort, accessories, and time parameters in the settings menu when the therapy device is in **Standby** mode.

6.1 Setting comfort parameters

Comfort parameters facilitate handling of the therapy device and components for the patient and ensure a comfortable therapy.

Requirement The therapy device is in **Standby** mode.

1. Press the menu button .
2. Press the **Comfort** field.
3. Configure the desired settings and confirm.

Parameter	Possible values	Description
autoSTART-STOP	On Off	Here you can activate/deactivate the automatic on/off function autoSTART-STOP. If the automatic on/off function is activated, you can switch the therapy device on with a breath. If there is no pressure for 5 seconds (e.g., because the mask has been removed), the therapy device switches itself off again automatically.
Mask test pressure	8 hPa-20 hPa (depending on the therapy pressure currently set)	Here you can set the pressure at which the mask test is performed (see "5.6 Performing a mask test", page 49). Leaks due to a poorly sitting mask often only occur at higher pressures.
softSTART Pressure	Intervals of 0.5 in the range prescribed by the physician or authorized dealer (e.g., 4 hPa to 8 hPa).	The softSTART function makes it easier to get used to the ventilation pressure when falling asleep (see 6.2, p. 63). You can set the required softSTART pressure here. If it is not possible to select this function, it must be enabled by your physician or authorized dealer.

WM 67841a 08/2014

Parameter	Possible values	Description
softPAP	Off 1 2 3	The softPAP exhalation relief function setting 1 and setting 2 are intended for patients who find exhaling against high pressure uncomfortable. The exhalation relief function reduces the pressure early during the transition to exhalation, allowing you to breathe out more easily. Setting 3 is suitable for patients who experience respiratory distress with a low pressure setting. The pressure is raised slightly during inspiration. You can select the setting for the softPAP exhalation relief here or deactivate it if you do not wish to use the function anymore. • Setting 1: Low exhalation relief • Setting 2: Normal exhalation relief • Setting 3: Exhalation relief with inhalation assistance This function is only available in CPAP and APAP mode. If it is not possible to select this function in one of these modes, it must be enabled by your physician or authorized dealer.

6.2 Setting accessories parameters

The accessories parameters are used to set the use of the accessories.

Requirement The therapy device is in **Standby** mode.

1. Press the menu button .
2. Press the **Accessories** field.
3. Configure the required settings and confirm.

Parameter	Possible values	Description
Tube type	15 mm 19-22 mm	Here you select the diameter of the hose type used. If it is not possible to select this function, it must be enabled by your physician or authorized dealer.
Change air filter	Changed Cancel	Here you specify whether you have changed the air filter. For this function, the authorized dealer must have activated the air filter reminder.

WM 67841a 08/2014

6.3 Setting time parameters

In the time parameters you set the minutes of the current time, the time zone, and the required wake-up time.

Requirement The therapy device is in **Standby** mode.

1. Press the menu button .
2. Press the **Time** field.
3. Configure the required settings and confirm.

Parameter	Possible values	Description
Time		Here you can set the current time: • Select daylight saving time or standard time. The green background of the symbol shows that this setting is active. • Use the arrow keys on the left to set the hours. • Use the arrow keys on the right to set the minutes. • Select the clock version: 24 hours (0-24) 12 hours (0-12) You can reset the time to the end of the last therapy at most.
Time zone	UTC -12 to UTC +12	Here you select the required time zone.
Wake-up time	00:00 -12:00 / 23:59	Here you set the time at which you want to be woken up (see "5.9.1 Setting the wake-up time and switching on the alarm", page 54).

6.4 Setting device parameters

You can use the device parameters to set the brightness of the display and the volume of the acoustic signals among other things as you wish.

Requirement The therapy device is in **Standby** mode.

1. Press the menu button .
2. Press the **Device** field.
3. Configure the required settings and confirm.

WM 67841a 08/2014

Parameter	Possible values	Description
Display brightness	1 2 3	Here you can set the brightness of the display. • Level 1: Dark • Level 2: Normal • Level 3: Bright
Leakage alert	Off On	Here you can set whether an alarm should be triggered in case of a leak. This allows you to change the position of your mask at night. By doing so you avoid side effects or a reduced therapy quality due to severe leaks. If it is not possible to select this function, it must be enabled by your physician or authorized dealer.
Energy saving	Off On	Here you can activate or deactivate whether the therapy device automatically switches to **Energy saving** mode 15 minutes after the therapy has finished. You save electricity if the therapy device is in **Energy saving** mode during the day.
Key tone volume	Off 1 2 3	Here you can set the volume of the acoustic signal for every time a key is pressed or switch the signal off. • Level 1: Quiet • Level 2: Normal • Level 3: Loud
Alarm volume	1 2 3	Here you can set the volume of the alarms. • Level 1: Quiet • Level 2: Normal • Level 3: Loud
Alarm clock volume	Off 1 2 3	Here you can set the volume of the alarm. • Level 1: Quiet • Level 2: Normal • Level 3: Loud

WM 67841a 08/2014

7 Hygienic preparation

7.1 General information

- **This product may contain disposable items. Disposable items are intended to be used only once.** So use these items only once and do **not** reprocess them. Reprocessing disposable items may impair the functionality and safety of the product and lead to unforeseeable reactions as a result of aging, embrittlement, wear, thermal load, the effects of chemical processes, etc.
- Wear suitable protective equipment for disinfection work.
- Please refer to the instructions for use supplied with the disinfectant used.
- Also observe the respective instructions for use for the therapy device, the components, and the accessories.
- The therapy device is suitable for subsequent use on further patients following hygienic preparation by the authorized dealer.

7.2 Cleaning intervals

Interval	Action
Weekly	• Clean the therapy device (see "7.3 Hygienic preparation of the therapy device", page 67)
	• Clean the respiration hose (see "7.4 Hygienic preparation of the respiration hose", page 69)
	• Clean the respiratory air humidifier (see "7.5 Hygienic preparation of the respiratory air humidifier", page 70) In clinical areas: Disinfect the respiratory air humidifier
Monthly	• Clean the air filter (see "7.3.1 Cleaning the air filter (gray filter)", page 68)
	• If installed: Replace the (optional) pollen filter (see "7.3.2 Replacing the optional pollen filter (white filter)", page 69)
Every 6 months	• Replace the air filter

WM 67841 a 08/2014

Interval	Action
Annually	• Replace the respiration hose
As necessary	• Descale the respiratory air humidifier (see "7.5.1 Descaling the respiratory air humidifier", page 74) • In clinical areas: Disinfect the respiration hose (see "7.4 Hygienic preparation of the respiration hose", page 69) • For reasons of hygiene: Replace the housing components of the respiratory air humidifier if they are in poor condition (e.g., if cracks appear).
When changing patients	• If the therapy device or respiratory air humidifier has been used without a bacteria filter: Have professional hygienic preparation performed before using the device again. Send the therapy device to your authorized dealer.

7.3 Hygienic preparation of the therapy device

⚠ CAUTION

Risk of injury from electric shock!
Any liquids entering the device can cause a short circuit, injure the user, and damage the therapy device.
⇒ Disconnect the therapy device from the power supply before starting the hygienic preparation.
⇒ Do not immerse the therapy device and the components in liquids.
⇒ Do not pour liquids over the therapy device and the components.

1. Switch off the therapy device (see "5.3 Switching off the therapy device", page 46).
2. Disconnect the therapy device from the power supply.
3. If present: Remove the respiratory air humidifier (see "4.3.3 Removing the respiratory air humidifier after use", page 38).
4. Prepare the therapy device and the components hygienically in accordance with the following table:

WM 67841a 08/2014

Part	Cleaning	Disinfection	Sterilization
Housing	Wipe with a damp cloth: use water or mild soap	Wipe disinfection (Recommendation: terralin® protect or perform advanced Alcohol EP)	Not permitted
High-gloss surfaces on the housing	Wipe with a damp cloth: use water or mild soap; do not use microfiber cloths		
Power supply unit	Wipe with a damp cloth: use water or mild soap		
Power supply cable	Wipe with a damp cloth: use water or mild soap		

5. If present: Connect the respiratory air humidifier up to the therapy device (see "4.3.2 Connecting the respiratory air humidifier", page 34).
6. Reconnect to power supply.
7. Perform a function check (see "8 Function check", page 76).

Result The therapy device and the components are hygienically prepared.

7.3.1 Cleaning the air filter (gray filter)

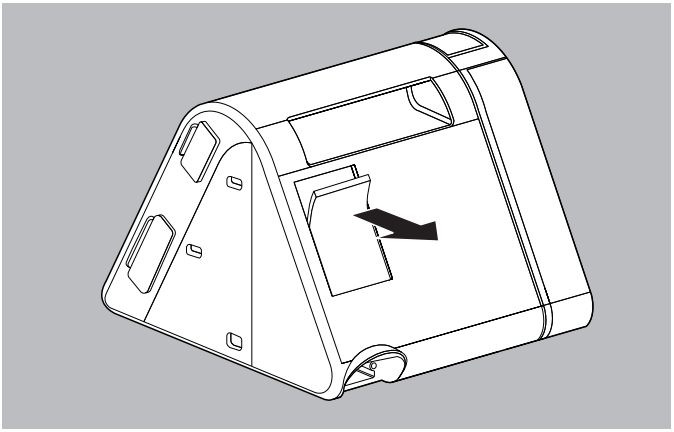

1. Remove the air filter.
2. Clean the air filter under running water.

WM 67841a 08/2014

3. Leave the air filter to dry.
4. Replace the air filter in the holding bracket.

Result The air filter is clean.

7.3.2 Replacing the optional pollen filter (white filter)

1. Remove the air filter.

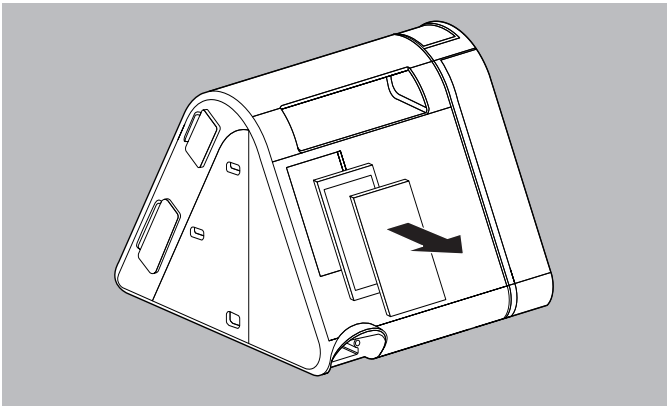

2. Remove and dispose of the pollen filter.
3. Insert the new pollen filter in the holding bracket.
4. Replace the air filter in the holding bracket.

Result The pollen filter has been replaced.

7.4 Hygienic preparation of the respiration hose

NOTICE

Damage to the device caused by ingress of liquids!
Ingress of liquids may damage the device.
⇒ Only use the respiration hose when it is completely dry.

1. Remove the respiration hose from the therapy device.
2. Carry out hygienic preparation of the respiration hose as specified in the following table:

WM 67841a 08/2014

Part	Cleaning	Disinfection	Sterilization
Respiration hose	With warm water and washing-up liquid	Immersion disinfection (Recommendation: gigasept FF®)	Not permitted

3. Rinse respiration hose off with clean water.
4. Shake respiration hose out thoroughly.
5. Hang up the respiration hose and leave it to drip dry.
6. Dry the respiration hose.

Result The respiration hose is hygienically prepared.

i If you use a heatable respiration hose, please observe the instructions for use for the respiration hose.

7.5 Hygienic preparation of the respiratory air humidifier

⚠ CAUTION

Risk of injury from hot element!
During and shortly after operation, the element of the respiratory air humidifier is hot and touching it can cause burns.
⇒ Allow the element to cool down completely.
⇒ Avoid touching the element.

Requirement The respiratory air humidifier is removed from the therapy device (see "4.3.3 Removing the respiratory air humidifier after use", page 38).

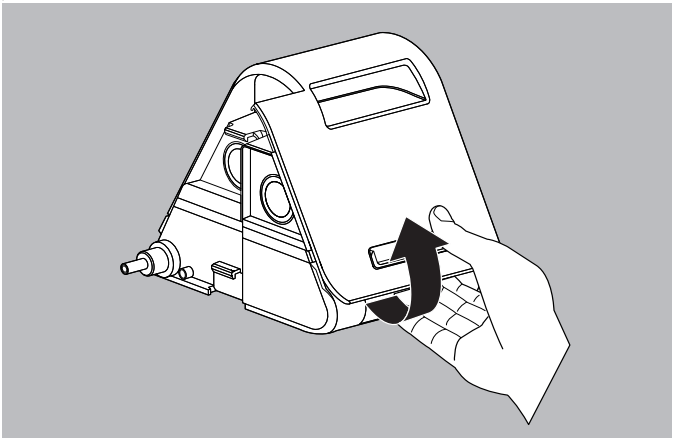

1. To open the respiratory air humidifier, grip the lower recess on the rear of the housing and press the rear of the housing gently with your thumb.
2. Remove the top of the humidifier.
3. Pour out any water remaining in the base of the humidifier.

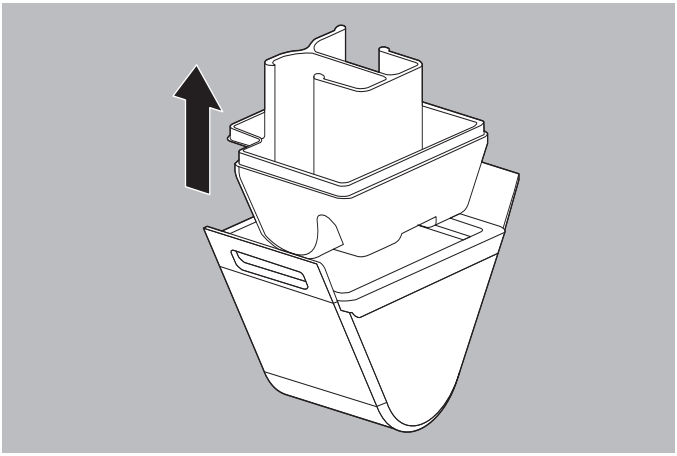

4. Remove the humidifier insert from the top of the humidifier.
5. Carry out hygienic preparation of all parts of the respiratory air humidifier as specified in the following table:

WM 67841a 08/2014

Part	Cleaning	Disinfection	Sterilization
Base of the humidifier	With warm water and washing-up liquid. Recommendation: Clean the housing components in the top rack of the dishwasher every week (maximum 65°C). If necessary: Descale (see "7.5.1 Descaling the respiratory air humidifier", page 74)	Immersion disinfection (Recommendation: gigasept FF®) or boil out for 5 minutes	Not permitted
Top of the humidifier	Wipe with a damp cloth: use water or mild soap; do not use microfiber cloths	Wipe-down disinfection (Recommendation: terralin® protect or perform advanced Alcohol EP) or boil out for 5 minutes	
Humidifier insert	With warm water and washing-up liquid. Recommendation: Clean the humidifier insert in the top rack of the dishwasher every week (maximum 65°C). If necessary: Descale (see "7.5.1 Descaling the respiratory air humidifier", page 74)	Boil out for 5 minutes	
Element	If necessary: Descale (see "7.5.1 Descaling the respiratory air humidifier", page 74)	Immersion disinfection (Recommendation: gigasept FF®) Spray disinfection (Recommendation: perform advanced) or boil out for 5 minutes	

6. Rinse parts with clean water.
7. Dry the parts carefully with a soft cloth.
8. If necessary: fill the base of the humidifier with fresh water (see " Filling the respiratory air humidifier", page 34).
9. Insert the humidifier insert into the top of the humidifier.

WM 67841a 08/2014

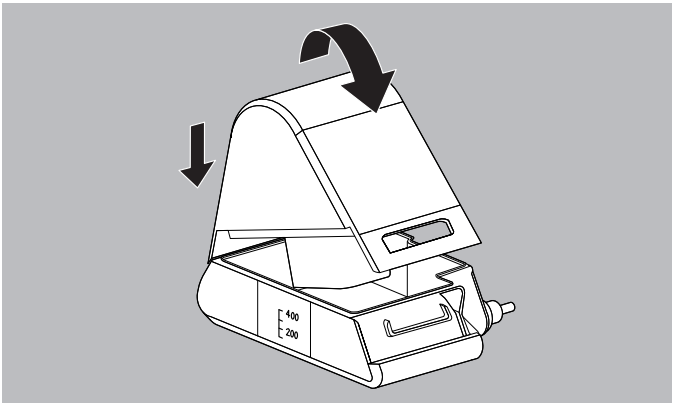

10. Place the top of the humidifier on the base of the humidifier from the back and press down gently until it clicks into place.

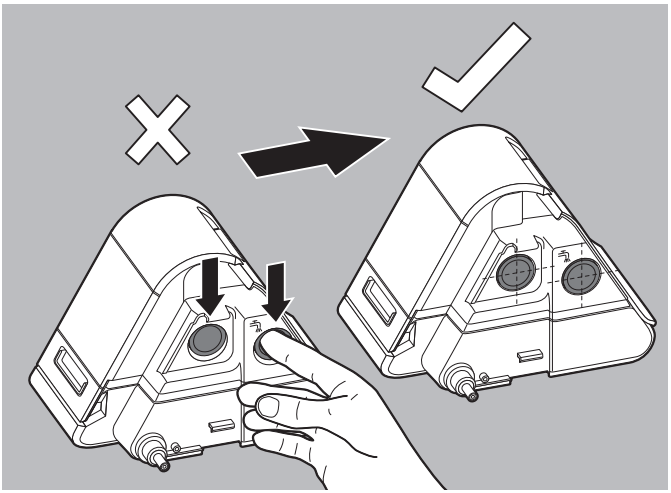

11. Ensure that the input and output of the humidifier insert fit exactly in the openings on the top of the humidifier.
    If necessary: Insert your fingers in the openings and make the necessary adjustments

12. Connect the respiratory air humidifier up to the therapy device (see " Installing the respiratory air humidifier", page 37).

13. Perform a function check (see "8.3 Checking the respiratory air humidifier", page 77).

Result The respiratory air humidifier is hygienically prepared.

7.5.1 Descaling the respiratory air humidifier

Requirement The respiratory air humidifier is removed from the therapy device (see "4.3.3 Removing the respiratory air humidifier after use", page 38).

1. To open the respiratory air humidifier, grip the lower recess on the rear of the housing and press the rear of the housing gently with your thumb.
2. Remove the top of the humidifier.
3. Remove the humidifier insert.
4. Pour 300 ml of pure household vinegar (5% solution without additives) into the base of the humidifier.
5. Place the humidifier insert in a bowl with pure household vinegar (5% solution without additives). The humidifier insert must be completely covered with vinegar.
6. Allow the vinegar to work for 1 hour.
7. Rinse the base of the humidifier, the element, and the humidifier insert off with clean water.
8. Dry the base of the humidifier, the element, and the humidifier insert carefully.

Result The base of the humidifier, the element, and the humidifier insert are descaled.

7.5.2 Replacing the seal on the element

Requirement

- The respiratory air humidifier is removed from the therapy device and emptied (see "4.3.3 Removing the respiratory air humidifier after use", page 38).
- The element is cold.

WM 67841a 08/2014

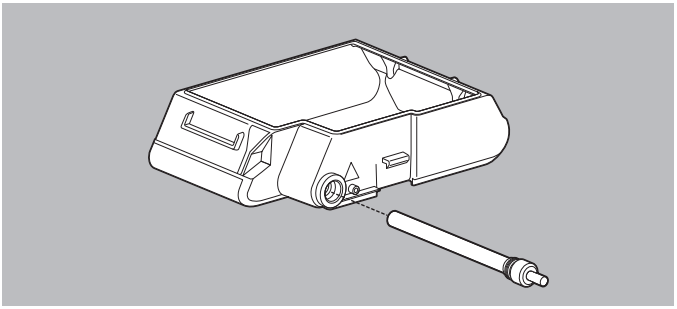

1. Unscrew the element from the base of the humidifier.

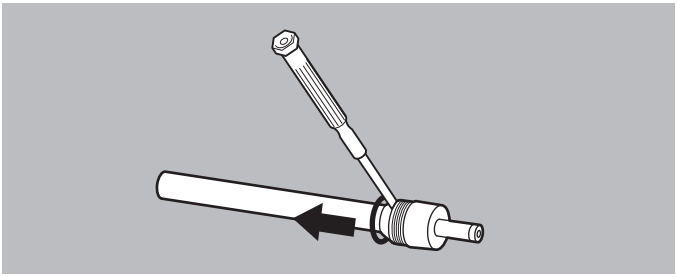

2. Remove the sealing ring carefully with a screwdriver, without damaging the groove.

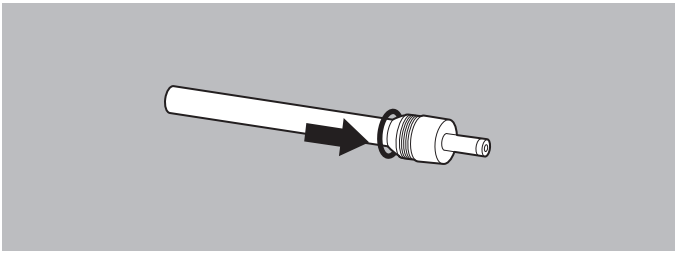

3. Insert a new sealing ring in the groove on the element.
4. Screw the element back into the base of the humidifier.
5. Close the respiratory air humidifier.

Result The seal on the element has been replaced.

WM 67841a 08/2014

8 Function check

8.1 Intervals

Carry out a function check at regular intervals:

- After each hygienic preparation
- After each repair
- At least every 6 months

8.2 Checking the therapy device

Requirement

- The therapy device is disconnected from the patient.
- The therapy device is connected to the power supply.
- The therapy device is in **Standby** mode.

1. Check the therapy device for external damage.
   If damaged: Do not use the therapy device.
2. Check the plug and cable for external damage.
   If damaged: Contact the authorized dealer and have the parts replaced.
3. Check that the components are connected to the therapy device correctly in accordance with these instructions for use (see "4.2 Connecting components", page 30).
4. Switch on the therapy device (see "5.2 Switching on the therapy device", page 43).
5. If softStart is activated: Press the softStart button to stop softStart.
6. Close the opening on the respiratory mask (e.g., using the elbow).
7. Press the info button .
8. Compare the pressure shown in the display with the prescribed pressure.
   If the pressure variance is > 1 hPa: Do not use the therapy device and contact the authorized dealer.

Result The function check is complete.

WM 67841 a 08/2014

8.3 Checking the respiratory air humidifier

Requirement

- The therapy device is disconnected from the patient.
- The therapy device is connected to the power supply.
- The therapy device is in **Standby** mode.

1. Check the housing for cracks, damage, and severe soiling.
2. If there are cracks, damage, or soiling: Replace housing parts or humidifier insert.
3. Fill the respiratory air humidifier up to the line with water (see " Filling the respiratory air humidifier", page 34).
4. Check whether the respiratory air humidifier has any leaks.
5. If the respiratory air humidifier does have leaks: Replace the damaged parts.
6. Pour out the water.
7. Fill the respiratory air humidifier with 200 ml of water.
8. Connect the respiratory air humidifier up to the therapy device (see " Installing the respiratory air humidifier", page 37).
9. Switch on the respiratory air humidifier (see "5.8.1 Switching on the respiratory air humidifier", page 51).
10. Set heating level 9 on the therapy device (see "5.8.3 Setting the humidifier level", page 53).
11. Check whether the respiratory air humidifier is warming up. If the respiratory air humidifier is not slightly warm after 10 minutes: Contact your authorized dealer.
12. If the respiratory air humidifier does not work properly or shows signs of damage: Contact your authorized dealer.

Result The function check is complete.

WM 67841a 08/2014

9 Alarms and error messages

If you are not able to clear an error message with the aid of the table below, you should have the device repaired by Weinmann or your authorized dealer. To avoid serious damage, do not continue using the device.

9.1 Alarms

Alarms can be categorized into three priority levels (low, medium, high). This device only has low-priority alarms, which are indicated by the symbol

9.1.1 Alarm messages

Alarm message	Cause	Remedy
Pressure build-up not possible! Please connect the mask and hose.	No respiration hose and/or mask connected.	Connect the mask and respiration hose correctly (see "4.2.2 Connecting up the respiration hose", page 32).
Severe leakage! Please check the positioning of the mask.	Mask has slipped or is not tight.	Reposition mask. If the mask is faulty, exchange it.

9.1.2 Muting the alarm

If an alarm sounds, you can mute the audible alarm for 2 minutes.

Requirement An alarm has been triggered.

1. Press the mute symbol .

Result The alarm is muted for 2 minutes. The symbol turns orange. After 2 minutes, the audible alarm sounds again.

If your physician has activated this function, you can also deactivate the alarms permanently (see "6.4 Setting device parameters", page 64).

WM 67841 a 08/2014

9.2 Faults in the therapy device

Fault	Cause	Remedy
No running noise, no information on the display.	No power supply.	Check that the power supply cable is connected properly. Check the function of the socket.
It is not possible to start therapy with a breath. The therapy device does not switch off after approx. 5 seconds when the mask is removed.	The autoSTART-STOP function is not active.	Activate the autoSTART-STOP function (see 6.1, p. 62).
	The autoSTART-STOP function can be impaired by accessories with a high level of resistance.	Contact your authorized dealer.
The softSTART cannot be switched on	The softSTART function is locked	Contact the physician to determine whether the function can be enabled.
The therapy device does not reach the lower pressure limit	Air filter is dirty	Clean the air filter. If necessary: Replace filter (see "7 Hygienic preparation", page 66).
	Respiratory mask not tight	Adjust the headband until the mask fits tightly. If necessary, replace the defective mask.

9.3 Faults in the respiratory air humidifier

Fault	Cause	Remedy
The respiratory air humidifier is not heating up	Humidifier level switched off	Set the humidifier level (see 5.8.3, p. 53)
	The respiratory air humidifier is defective	Have therapy device repaired.
Respiratory air humidifier is leaking.	The seal on the element is defective	Replace the seal (see 7.5.2, p. 74).
	The humidifier insert is not inserted correctly.	Insert the humidifier insert correctly (see 7.5, p. 70).
	The humidifier insert is defective	Replace the humidifier insert.
	Cracks in the base of the humidifier	Replace the base of the humidifier.
Respiratory air humidifier switches off	No water in the respiratory air humidifier	Fill the respiratory air humidifier with water (see , p. 34).

WM 67841a 08/2014

9.4 Display messages

If the message **Error (xxx): Please follow the instructions in the Instructions for use** appears on the display, locate the displayed error code in the table. Rectify the error as described.

Error code	Cause	Remedy
(108)	The therapy device does not display the set time.	Contact the authorized dealer and have the device repaired.
(204)	The respiratory air humidifier is not working correctly.	Remove the respiratory air humidifier from the therapy device and connect it again (see 4.3.3, p. 38). If the message is still shown, contact the authorized dealer and have the device and the respiratory air humidifier checked.
(205)	The power supply voltage is not within the permitted range.	Check whether the correct power supply unit is connected (WM 29657). Contact the authorized dealer and have the device and power supply unit checked and repaired.
(206)	Error in the prismaCONNECT module.	Remove and reconnect the prismaCONNECT module. If the fault persists: Contact the authorized dealer and have the prismaCONNECT module replaced.
All other error codes	Problems with the electronics	Disconnect the therapy device from the power supply and reconnect it (see 4.2.1, p. 30). If the message is still shown, contact the authorized dealer and have the device and the respiratory air humidifier checked.

WM 67841a 08/2014

10 Maintenance

The therapy device is designed to have a useful service life of 6 years.

If the therapy device is used as intended in accordance with the instructions for use, it does not require any maintenance within this period.

If the therapy device is used beyond this period, we recommend having it checked by an authorized dealer.

If the respiratory air humidifier is used as intended in accordance with these instructions for use, it does not require any maintenance.
If used and cleaned daily, the respiratory air humidifier can be used for > 6 months.

If you identify faulty parts during the function check (see "8 Function check", page 76), contact your authorized dealer.

WM 67841a 08/2014

11 Storage and disposal

11.1 Storage

11.1.1 General information

Store the device under the prescribed ambient conditions (see chapter "Technical Data").

11.1.2 Storing the therapy device

1. Switch off the therapy device (see "5.3 Switching off the therapy device", page 46).
2. Disconnect the therapy device from the power supply.
3. Clean the therapy device, components, and accessories (see "7 Hygienic preparation", page 66).
4. Store the therapy device, components, and accessories in a dry place.

Result The therapy device, components, and accessories are stored in a dry place.

11.2 Disposal

11.2.1 Electronic waste

Do not dispose of the product in the household waste. Consult an authorized, certified electronic waste recycling company for proper disposal. You can find out their address from your environmental officer or from your local council.
The device packaging (cardboard box and inserts) can be disposed of as waste paper.

WM 67841 a 08/2014

12 Appendix

12.1 Technical data

12.1.1 Technical data on therapy device

Specification	Therapy device
Product class according to 93/42/EEC	IIa
Dimensions W x H x D in cm	17 x 13.5 x 18
Weight	1.4 kg
Temperature range - Operation - Storage	 +5°C to +40°C -25°C to +70°C
Permissible humidity during operation and storage	Rel. humidity 15% to 93%, non-condensing
Air pressure range	700 hPa to 1060 hPa, corresponds to a height of 3000 m above sea level
Connection diameter of respiration hose in mm	19.5 (to fit standard cone)
Electrical power	max. 40 VA
System interface	12 V DC max. 10 VA
Current consumption during operation (Therapy) 230 V 115 V during standby mode (Standby) 230 V 115 V	 0.11 A 0.22 A 0.036 A 0.019 A
Classification acc. to DIN EN 60601-1-11: Protection class against elec. shock Degree of protection against elec. shock Protection against harmful ingress of water and foreign bodies	 Protection class II BF IP21
Classification as per DIN EN 60601-1: Operating mode	Continuous operation
Applied part	Respiratory mask

WM 67841a 08/2014

Specification	Therapy device	
Electromagnetic compatibility (EMC) as per DIN EN 60601-1-2 Radio interference suppression Radio interference immunity	Test parameters and limit values can be requested from the manufacturer if required. EN55011 B IEC61000-4 Parts 2 to 6, Part 11, Part 8 IEC61000-3 Parts 2 and 3	
Average sound pressure level in operation as per ISO 80601-2-70	Approx. 26.5 dB(A) at 10 hPa (corresponds to a sound power level of 34.5 dB(A))	
Average sound pressure level in operation as per ISO 80601-2-70 with respiratory air humidifier	Approx. 27.5 dB(A) at 10 hPa (corresponds to a sound power level of 35.5 dB(A))	
CPAP operating pressure range	4 hPa to 20 hPa	
AcSV pressure range	4 hPa to 30 hPa	
BiLevel pressure range	4 hPa to 25 hPa	
Pressure accuracy	< 20 hPa: ± 0.6 hPa ≥ 20 hPa: ± 0.8 hPa	
P Lim_{max} (maximum pressure in case of error)	≤ 40 hPa	
Target volume in AcSV mode	It is not possible to set a target volume for the AcSV mode. The pressure control always stabilizes the volume at the respective current level.	
Automatic backup frequency in AcSV mode	The automatic backup frequency in AcSV mode is continuously adapted between 10 bpm and 20 bpm depending on the filtered spontaneous rate and the relative respiratory minute volume of the patient.	
Peak flow as per ISO 80601-2-70	pressure measured at the patient connection opening with a flow of 40 l/min	average flow at the patient connection opening [l/min]
CPAP and APAP mode Test pressures:		
4 hPa	4.0 hPa	235 l/min
8 hPa	8.0 hPa	230 l/min
12 hPa	11.9 hPa	220 l/min
16 hPa	15.9 hPa	215 l/min
20 hPa	19.9 hPa	210 l/min
AcSV mode Test pressures:		
4 hPa	4.0 hPa	235 l/min
10.5 hPa	10.4 hPa	225 l/min
17 hPa	17.0 hPa	215 l/min
23.5 hPa	23.5 hPa	200 l/min
30.0 hPa	30.0 hPa	190 l/min
Warming of respiratory air	max. +3°C	

WM 67841a 08/2014

Specification	Therapy device
Stability of the dynamic pressure (short-term accuracy) for 10 breaths/min as per ISO 17510-1:2007 when using the 19 mm hose. 7 hPa 10 hPa 13.5 hPa 20 hPa	 $\Delta p \leq 0.24$ hPa $\Delta p \leq 0.28$ hPa $\Delta p \leq 0.3$ hPa $\Delta p \leq 0.4$ hPa
Stability of the dynamic pressure (short-term accuracy) for 15 breaths/min as per ISO 17510-1:2007 when using the 19 mm hose. 7 hPa 10 hPa 13.5 hPa 20 hPa	 $\Delta p \leq 0.24$ hPa $\Delta p \leq 0.32$ hPa $\Delta p \leq 0.4$ hPa $\Delta p \leq 0.48$ hPa
Stability of the dynamic pressure (short-term accuracy) for 20 breaths/min as per ISO 17510-1:2007 when using the 19 mm hose. 7 hPa 10 hPa 13.5 hPa 20 hPa	 $\Delta p \leq 0.4$ hPa $\Delta p \leq 0.32$ hPa $\Delta p \leq 0.46$ hPa $\Delta p \leq 0.56$ hPa
Stability of the dynamic pressure (short-term accuracy) as per ISO 80601-2-70 in CPAP and APAP mode - when using the 19 mm hose 4 hPa 8 hPa 12 hPa 16 hPa 20 hPa	 $\Delta p \leq 0.68$ hPa $\Delta p \leq 0.58$ hPa $\Delta p \leq 0.52$ hPa $\Delta p \leq 0.44$ hPa $\Delta p \leq 0.64$ hPa
when using the 15 mm hose, bacteria filter, and oxygen safety valve 4 hPa 8 hPa 12 hPa 16 hPa 20 hPa	 $\Delta p \leq 1.06$ hPa $\Delta p \leq 1$ hPa $\Delta p \leq 1.08$ hPa $\Delta p \leq 1.02$ hPa $\Delta p \leq 0.96$ hPa

WM 67841a 08/2014

Specification	Therapy device
Stability of the static pressure (long-term accuracy) as per ISO 80601-2-70 - when using the 19 mm hose - when using the 15 mm hose, bacteria filter, and oxygen safety valve	 Δp = 0.15 hPa Δp = 0.19 hPa
Stability of the dynamic pressure (short-term accuracy) as per ISO 80601-2-70 in modes with 2 pressure levels At 10 bpm inspiratory At 15 bpm inspiratory At 20 bpm inspiratory At 10 bpm expiratory At 15 bpm expiratory At 20 bpm expiratory	 Δp = 0.8 hPa Δp = 1.4 hPa Δp = 2.4 hPa Δp = 0.6 hPa Δp = 0.6 hPa Δp = 0.6 hPa
Pressure drop via the oxygen valve at 90 l/min at 60 l/min at 30 l/min	 0.5 hPa 0.25 hPa 0 hPa
Pollen filter up to 1 µm up to 0.3 µm	Filter class E10 ≥ 99.5% ≥ 85 %
Service life of pollen filter	Approx. 250 hours
SD card	Memory sizes of 256 MB to 8 GB can be used, interface compatible with SD physical layer version 2.0

Tolerances for measurements

Pressure:	± 0.75% of measurement or ± 0.1 hPa
Flow:	± 4 l/min
Temperature:	± 1.5°C
Sound pressure level and sound power level	± 2dB(A)

CE 0197

The right to make design modifications is reserved.
All flow values are determined under STPD conditions.

All the parts of the therapy device are free from latex.
The WM 100 TD therapy devices use the following open source software: FreeRTOS.org

A list of additional open source software can be found at www.weinmann.de.

WM 67841a 08/2014

12.1.2 Technical data on power supply unit

Specification	Power supply unit
Max. output	90 W
Input voltage	100 V - 240 V
Frequency	50 Hz - 60 Hz
Input voltage for use in airplanes	115 V
Frequency for use in airplanes	400 Hz

12.1.3 Technical data on respiratory air humidifier

Specification	prismaAQUA
Product class according to 93/42/EEC	IIa
Dimensions W x H x D in cm	14 x 13.5 x 18
Weight (without water)	0.6 kg
Temperature range Operation Storage	 +5°C to +37°C -25°C to +70°C
Permissible humidity during operation and storage	15% to 93%, non-condensing
Air pressure range	700 hPa to 1060 hPa, corresponds to a height of 3000 m above sea level
Electrical power	Max. 30 VA (only in combination with the permitted device)
Classification acc. to DIN EN 60601-1-11: Type of protection against elec. shock Degree of protection against elec. shock Protection against harmful ingress of water and foreign bodies	 Protection class II Type BF IP22
Classification as per DIN EN 60601-1: Operating mode	 Continuous operation
Electromagnetic compatibility (EMC) acc. to DIN EN 60601-1-2 Radio interference suppression Radio interference immunity	Test parameters and limit values can be requested from the manufacturer if required. EN 55011 B IEC 61000-4 Parts 2 to 6, Part 11, Part 8 IEC 61000-3 Parts 2 and 3
Warming of respiratory air	max. +3°C

WM 67841a 08/2014

Specification	prismaAQUA
Respiratory air humidifier system output acc. to DIN EN ISO 8185	min. 19.89 mg H_2O/l air
Maximum filling volume	400 ml
Pressure drop	The pressure drop across the device combination of WM 100 TD therapy device and WM 100 TH respiratory air humidifier does not increase.
Maximum flow	248 l/min
Maximum permitted operating pressure	40 hPa
Gas leakage at max. operating pressure	0.0 l/min

12.2 Pressure volume curve

pV curve at AV=0.5 l and f=20/min

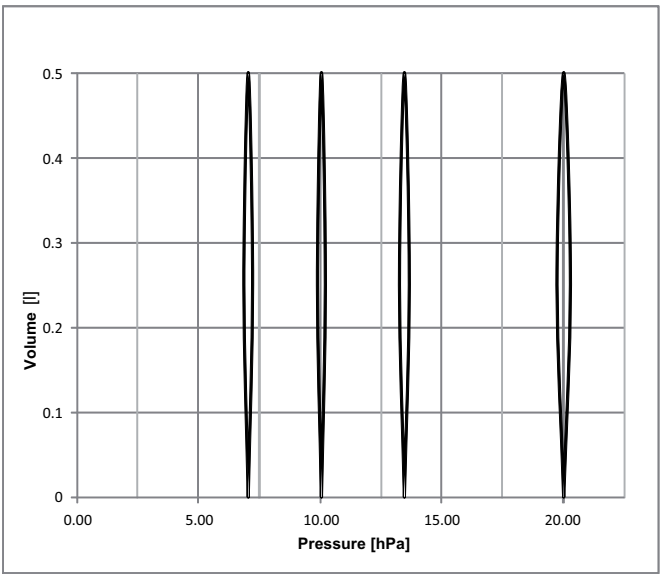

WM 67841a 08/2014

12.3 Pneumatic system diagram

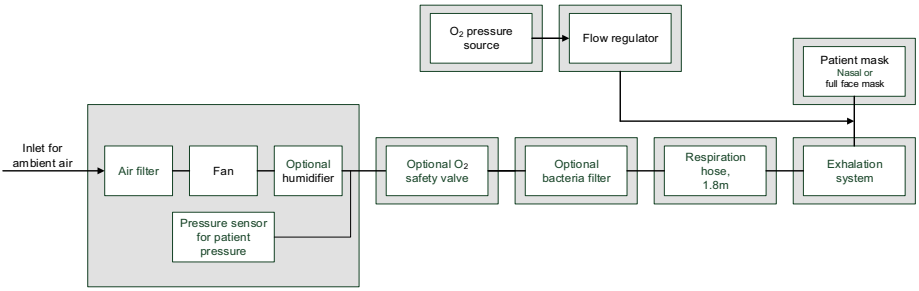

12.4 Separation distances

Recommended separation distances between portable and mobile RF telecommunication devices (e.g., cell phones) and the device				
Rated maximum output power of the RF device in W	**Separation distance according to frequency of transmitter in m**			
	150 kHz-80 MHz outside the ISM bands	**150 kHz-80 MHz in the ISM bands**	**80 MHz-800 MHz**	**800 MHz-2.5 GHz**
0.01	0.04	0.12	0.12	0.23
0.1	0.11	0.38	0.38	0.73
1	0.35	1.20	1.20	2.30
10	1.10	3.80	3.80	7.27
100	3.50	12.00	12.00	23.00

WM 67841a 08/2014

12.5 Scope of supply

12.5.1 Standard scope of supply

The XXXX in the second part of the article number stands for the accessory items, which are available in different versions (e.g., transport bag, respiration hose) and can be combined in different ways. A current list of the products included in delivery can be found on the Internet at www.weinmann.de or requested from your authorized dealer. Not all device versions and delivery contents are available in all countries.

prisma20C, complete **WM 29630-XXXX**

Part	Article number
Basic device prisma20C, WM 100 TD	WM 29935
Respiration hose	WM 24445
Power supply unit	WM 29657
Power supply cable	WM 24133
Set, 2 air filters	WM 29928
Transport bag	WM 29659
SD card	WM 29791
Protective wallet for SD card	WM 29779
Instructions for use	WM 67841
Patient compass	WM 67871

prisma20A, complete **WM 29600-XXXX**

Part	Article number
Basic device prisma20A, WM 100 TD	WM 29605
Respiration hose	WM 24445
Power supply unit	WM 29657
Power supply cable	WM 24133
Set, 2 air filters	WM 29928
Transport bag	WM 29659
SD card	WM 29791
Protective wallet for SD card	WM 29779
Instructions for use	WM 67841
Patient compass	WM 67871

WM 67841 a 08/2014

prismaCR, complete **WM 29960-XXXXX**

Part	Article number
Basic device prismaCR, WM 100 TD	WM 29965
Respiration hose	WM 24445
Power supply unit	WM 29657
Power supply cable	WM 24133
Set, 2 air filters	WM 29928
Transport bag	WM 29977
SD card	WM 29791
Protective wallet for SD card	WM 29779
Instructions for use	WM 67841
Patient compass	WM 67871

prisma25ST, complete **WM 29920-XXXX**

Part	Article number
Basic device prisma25ST, WM 100 TD	WM 29925
Respiration hose	WM 24445
Power supply unit	WM 29657
Power supply cable	WM 24133
Set, 2 air filters	WM 29928
Transport bag	WM 29977
SD card	WM 29791
Protective wallet for SD card	WM 29779
Instructions for use	WM 67841
Patient compass	WM 67871

prisma25S, complete **WM 29900-XXXX**

Part	Article number
Basic device prisma25S, WM 100 TD	WM 29905
Respiration hose	WM 24445
Power supply unit	WM 29657
Power supply cable	WM 24133
Set, 2 air filters	WM 29928

Part	Article number
Transport bag	WM 29977
SD card	WM 29791
Protective wallet for SD card	WM 29779
Instructions for use	WM 67841
Patient compass	WM 67871

prisma25S-C, complete **WM 29910-XXXX**

Part	Article number
Basic device prisma25S-C, WM 100 TD	WM 29906
Respiration hose	WM 24445
Power supply unit	WM 29657
Power supply cable	WM 24133
Set, 2 air filters	WM 29928
Transport bag	WM 29977
SD card	WM 29791
Protective wallet for SD card	WM 29779
Instructions for use	WM 67841
Patient compass	WM 67871

prismaLAB, complete **WM 29980-XXXX**

Part	Article number
Basic device prismaLAB, WM 100 TD	WM 29985
Respiration hose, autoclavable	WM 24667
Power supply unit	WM 29657
Power supply cable	WM 24133
prismaCONNECT	WM 29670
Set, 2 air filters	WM 29928
Transport bag	WM 29659
SD card	WM 29791
Protective wallet for SD card	WM 29779
Instructions for use	WM 67841
Additional information for experts	WM 67901

prismaAQUA **WM 29680**

WM 67841 a 08/2014

12.5.2 Accessories

Accessories can be ordered separately, if required. A current list of accessories is available on the Internet at www.weinmann.de or from your authorized dealer.

12.5.3 Spare parts

Replacement parts can be ordered separately, if required. A current list of accessories is available on the Internet at www.weinmann.de or from your authorized dealer.

12.6 Warranty

Starting from the date of purchase, Weinmann offers the customer a limited manufacturer's warranty on a new original Weinmann product or replacement parts installed by Weinmann in accordance with applicable warranty terms and conditions for the particular product and the warranty periods listed below. The warranty conditions can be downloaded from www.weinmann.de on the Internet. We can also send you the warranty conditions on request. In the event of a claim under warranty, please contact your specialist dealer.

Product	Period of guarantee
Weinmann devices, incl. accessories (excluding: masks), for sleep diagnostics, home ventilation, oxygen therapy, and emergency medicine	2 years
Masks, incl. accessories, batteries (unless otherwise stated in the technical documentation), sensors, hose systems	6 months
Disposable products	None

WM 67841a 08/2014

12.7 Declaration of conformity

Weinmann Geräte für Medizin GmbH + Co. KG, Kronsaalsweg 40, 22525 Hamburg, Germany, the manufacturer of the therapy devices described in these instructions for use, hereby declares that the product complies with the relevant regulations of Directive 93/42/EEC governing medical devices.
The complete text of the Declaration of Conformity is available from the manufacturer, Weinmann (www.weinmann.de).

WM 67841a 08/2014

Weinmann
Geräte für Medizin GmbH + Co. KG
P.O.Box 540268 ▪ 22502 Hamburg
Kronsaalsweg 40 ▪ 22525 Hamburg
T: +49-(0)40-5 47 02-0
F: +49-(0)40-5 47 02-461
E: info@weinmann-medical.com
www.weinmann-medical.com

WM 67841a 08/2014 EN

medical technology
made in germany

WEINMANN
medical technology